IIETA International Information and Engineering Technology Association
Advancing the World of Information and Engineering

Ingénierie des Systèmes d'Information
Vol. 31, No. 10, October, 2026, pp. 3441-3452
Journal homepage: http://iieta.org/journals/isi

Factors Associated with Upper-Secondary Students' Acceptance and Use of AI-Based Virtual Laboratories: A Modified UTAUT2 Study in Sukoharjo, Indonesia

Eka Tuti Setyawati, Agus Efendi*, Fatma Sukmawati

Faculty of Teacher Training and Education, Universitas Sebelas Maret, Surakarta 57126, Indonesia

Corresponding Author Email: agusefendi@staff.uns.ac.id

Copyright: ©2026 The authors. This article is published by IIETA and is licensed under the CC BY 4.0 license (http://creativecommons.org/licenses/by/4.0/).

https://doi.org/10.18280/isi.311017

Received: 1 July 2026
Revised: 11 September 2026
Accepted: 18 September 2026
Available online: 31 October 2026

Keywords:
artificial intelligence-enabled virtual laboratories, technology acceptance, modified UTAUT2, behavioral intention, use behavior, upper-secondary education, structural equation modeling

ABSTRACT

Artificial intelligence (AI)-enabled virtual laboratories (VLs) are increasingly being introduced into science education, yet the factors associated with their acceptance by senior high school students remain insufficiently understood. This study examines students' acceptance and reported use of AI-based VLs through a modified Unified Theory of Acceptance and Use of Technology 2 (UTAUT2) framework. Habit and price value were excluded because most respondents had limited experience with the technology and did not incur direct costs for access. Questionnaire data were obtained from 467 students in 19 public and private senior high schools in Sukoharjo Regency, Indonesia. The proposed relationships among performance expectancy (PE), effort expectancy (EE), social influence (SI), facilitating conditions (FC), hedonic motivation (HM), behavioral intention (BI), and use behavior (UB) were examined using structural equation modeling (SEM) with IBM SPSS AMOS 23. PE, EE, SI, and HM were positively and significantly associated with BI. FC was not significantly associated with either BI or UB, while BI showed a positive and significant association with UB. The model explained 44.8% of the variance in BI. However, the reported coefficient of determination for UB was only 0.1%, indicating that the model explains very little variation in students' reported use. These findings identify the perceptions most closely associated with students' intention to use AI-based VLs, while highlighting the limited explanatory power of the model for reported UB.

1. INTRODUCTION

During the COVID-19 pandemic, virtual laboratories (VLs) played a significant role in supporting distance learning systems and maintaining educational continuity [1]. These circumstances have accelerated the adoption of VLs, establishing them as essential tools for educators. Although conventional laboratories provide authentic, empirical experiences for research and education, they incur high operational costs, especially for equipment procurement, physical space, and maintenance staff [2]. Virtual laboratories can help address financial constraints associated with procuring laboratory equipment and materials [3]. Additionally, the visualizations in these virtual platforms assist students in conceptualizing abstract phenomena and deepening their understanding of scientific principles. The flexibility of VLs enables students to manipulate experimental variables and analyze results more rapidly than with conventional or remote laboratory methods [4].

VLs are generally well established in several countries and regions, including Europe [5], the United States [6], and China [7]. According to an international evaluation of the research, VLs offer advantages in flexibility, safety, and access, as well as, in many cases, better learning outcomes when well-designed [5, 8, 9]. VLs help students not only to establish practical skills but also to develop conceptual understanding [10]. These VLs can speed up research and raise its standards by saving time and generating theory-consistent data [11].

When combined with artificial intelligence (AI), VLs can incorporate adaptive features such as personalized learning pathways, instant feedback, and pedagogical agents that monitor and intervene in students' learning processes, thereby making learning more effective [12-14]. AI technology supports personalized materials that adapt to students' competency profiles and individual needs by providing automated recommendation systems, guidance, and feedback [14-16]. This AI-based personalization lets students learn at their own pace, wherever they are, increasing flexibility in the learning process [17]. Chen et al. [18] explain that integrating AI across sectors has transformed traditional practices, with education among the most significantly affected domains. Research [19] further supports this, showing that AI-based applications have strong potential to modernize pedagogical approaches, enable personalized learning experiences, and improve educational outcomes. Research findings [20, 21] confirm the transformative role of AI as a revolutionary solution in mitigating various contemporary problems in the education sector by fostering innovation, flexibility, and relevance within digital learning ecosystems.

This study investigates the acceptance of AI-based VLs. While research on the adoption of conventional VLs and general AI-based technologies has expanded rapidly, the explicit integration of AI features into VL environments remains underexplored. Most prior studies have examined

either passive simulation media or generic AI technologies in isolation. Incorporating AI elements into VLs introduces new interaction dynamics, such as concurrent adaptive feedback and personalized guidance, which may influence students' perceptions of ease of use and perceived usefulness. Accordingly, this study applies an established technology adoption framework and evaluates its ability to explain students' adoption behavior regarding the integration of science simulation and AI at the secondary school level.

2. LITERATURE REVIEW

2.1 Artificial intelligence-based virtual laboratories

VLs offer several important advantages in science instruction. One of the main constraints of conventional laboratory-based learning is the high cost of procuring and maintaining complex, modern scientific equipment [22]. The study [23] highlighted that remote-access physical laboratories can involve considerable expenses related to communication and sensory-control hardware and software, as well as equipment maintenance.

On the other hand, Virtual laboratories offer a cost-efficient alternative to conventional laboratory instruction by reducing dependence on expensive physical equipment, consumable materials, and equipment maintenance [23]. This cost reduction occurs because the learning process no longer relies on physical laboratory equipment, chemicals, or other consumables. This makes VL a relevant solution, particularly for educational institutions with limited funding. Nevertheless, VL also presents several drawbacks that cannot be ignored. Although it offers economic efficiency, the virtual learning environment has not yet fully replaced the hands-on experimental experience students need to develop practical skills and manual dexterity, which are essential competencies for applying scientific knowledge directly [24]. Furthermore, digital technology-based VL systems require students to learn more independently without direct supervision from laboratory instructors. This can create additional challenges, particularly for students who lack sufficient technological adaptability, risking disparities in learning outcomes.

Research shows that integrating AI into VL significantly improves the quality of students' learning experiences. A study [25] explains that, compared to conventional laboratories, AI-based VLs can provide a more personalized learning experience through tailored learning pathways, adaptive assessment, and more intelligent automated feedback systems. Similarly, the study [26] emphasizes that AI can promote active learning through interactive simulations and collaborative activities that enhance learner engagement. Furthermore, the research [27] demonstrates that AI technology using machine learning can analyze learners' performance and tailor content to individual needs, making the learning process more effective and improving knowledge retention.

The literature broadly agrees that AI-based VLs can catalyze the development of 21st-century competencies such as critical reasoning, complex problem-solving, and digital literacy [28, 29]. Their success in practical settings cannot be viewed solely as a derivative of technological sophistication. The successful integration of this technology is fundamentally mediated by internal user variables, including psychological dispositions or attitudes toward innovation, the level of technological readiness to adopt new systems, and the maturity of one's digital skills. Without considering these intrapersonal determinants, AI technology risks failing to realize its educational potential fully [30].

2.2 Artificial intelligence-based virtual laboratories acceptance

In information systems, a system's implementation effectiveness depends on the degree of acceptance and how well end users use it. This premise underscores the need to identify and comprehensively examine the determinants that impact students' acceptance of AI-based VLs [25]. Although trends indicate increased usage and deeper technical understanding, within the technology-adoption paradigm, acceptance remains a fundamental prerequisite for the sustainable success of integrating such innovations [31, 32].

While numerous theoretical models can be used to explain how technology is accepted, studies examining students' acceptance of using VLs and AI separately generally employ approaches such as the Technology Acceptance Model (TAM), the Unified Theory of Acceptance and Use of Technology (UTAUT), and the Theory of Planned Behavior (TPB). However, research examining students' acceptance of VLs that integrate AI remains limited, particularly studies that place students at the center of the analysis.

Numerous earlier studies have shown that attempts to understand how people adopt new technology and form intentions to use it have given rise to a range of conceptual models and theoretical paradigms underlying technology acceptance. One early widely used model is the TAM introduced in study [31], rooted in earlier research [33] and further examined by Venkatesh et al. [34]. Meanwhile, the study [35] developed another approach to explaining technology usage behavior through the TPB. As studies on technology adoption have progressed, researchers have not only used these models widely but also tested, adapted, and modified them to improve their ability to predict technology acceptance and usage behavior [34].

Since then, further studies have tested cross-model reliability in predicting technology acceptance. The study [34] indicates that UTAUT has more comprehensive explanatory power in information system adoption than alternative models. The study [36] further reinforces this model's superiority, claiming that because UTAUT emphasizes the technological elements that affect the effective implementation of information systems, it is one of the most commonly used frameworks in technology acceptance research. A study of Indonesian vocational students found that perceived usefulness, perceived ease of use, and attitudes were significantly associated with intentions to use virtual laboratories [37].

Based on these various considerations, this study adopted UTAUT as the theoretical framework for analyzing technology acceptance. This model was selected because UTAUT provides a firm foundation for explaining the factors that impact students' decisions to accept or reject AI-based VLs. Consequently, this study's conceptual model was developed on UTAUT as its primary basis, ensuring the research framework focuses on explaining students' acceptance behavior concerning this technology.

In this research, the Unified Theory of Acceptance and Use of Technology 2 (UTAUT2) model was applied with the adjustment of removing the variables habit and price value, as

both constructs were deemed insufficiently representative of this study's context. The habit construct in the UTAUT2 model describes technology usage behavior that arises automatically from repeated use over time. This construct was excluded because most respondents were in the early stages of adopting the AI-based VLs, with 81.16% reporting less than six months of use. Theoretically, habit formation requires repeated usage over a long period (routinization). This aligns with the study [38], which showed that 'habit' is generally excluded when users are in the early stages of adoption and have not yet established a routine. Furthermore, the study [39] emphasizes that in the early stages of use, behavioral intention (BI) is a much stronger predictor, while habit strengthens only as experience increases. Consequently, excluding habit has a strong empirical and theoretical basis for this study's population.

Meanwhile, the price value construct was excluded because students are end-users, not commercial consumers who bear the financial costs. The school or institution provides and funds the AI-based VL facilities at no cost. Venkatesh formulated price value specifically for the consumer context, where a cognitive trade-off exists between perceived benefits and personal monetary costs [40]. When user costs are zero, the price value variable loses its theoretical relevance and variability. This decision is supported by the study [41], which confirms that, in the context of AI technology adoption and learning systems in educational settings, the price variable is irrelevant for students who access these facilities without incurring any personal costs. This also aligns with the meta-analysis by the study [42], which found that most UTAUT2 studies excluded price value in systems provided free of charge by institutions.

Based on these considerations, this study only uses the constructs performance expectancy (PE), effort expectancy (EE), social influence (SI), facilitating conditions (FC), hedonic motivation (HM), behavioral intention (BI), and use behavior (UB) that are thought to be most pertinent to the context of learning technology acceptance.

3. METHODOLOGY

Previous studies have demonstrated that the successful implementation of AI-based VLs at the upper secondary school level is significantly influenced by technology acceptance, user acceptance, and intention to use the system [43, 44]. Understanding students' perspectives on AI-based VLs is therefore essential for evaluating the effectiveness of these technology-based learning processes [43, 45]. Multiple studies have identified several factors that affect students' acceptance of VLs. Building on this foundation, the present study develops a conceptual model that integrates seven constructs adapted from the UTAUT to explain the determinants of students' acceptance of AI-based VLs. The research model in Figure 1 is structured to analyze the contribution of each factor to technology use.

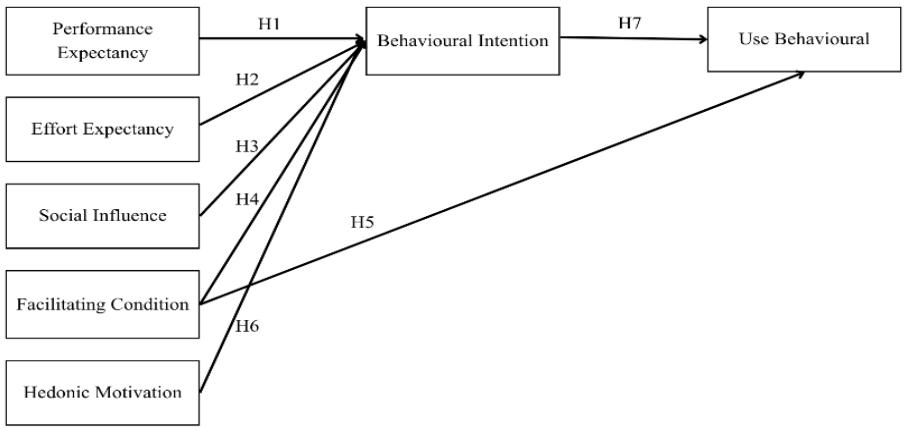

Figure 1. Research model

Findings from several previous studies indicate that students' perceptions of AI-based VLs relate to several key constructs, such as PE, EE, SI, and FC [43, 46-48]. Other studies have reinforced these findings by developing the UTAUT to analyze acceptance of VLs in various educational contexts [46, 49]. The results show that students' BI to use AI-based VLs is significantly influenced by their PE, EE, SI, FC, and HM.

To effectively achieve its objectives, this study was conducted in two phases. The first phase involved data collection using a questionnaire distributed to upper secondary school students in Years 10, 11, and 12. The study examined the acceptance and actual use of AI-based VLs in upper secondary schools, including students' attitudes toward their use and their actual usage levels. Respondents were drawn from various specialized programs, particularly physics, mathematics, biology, and chemistry, with the primary criterion being prior experience using AI-based VLs.

Respondents have used VL platforms for some time—most notably PhET Colorado and Vlaby. Still, AI-based VLs, such as Unimind and Praxy Lab (used for physics, chemistry, and biology), are relatively new. Teachers recommend these AI-based VLs because they feature an AI assistant that supports student learning. In Unimind, for instance, students can select the concepts they wish to master first; teachers then provide worksheets that students can complete at their own pace, allowing practical work to continue independently at home.

3.1 Research model

3.1.1 Performance expectancy

PE is a construct that measures the degree to which an individual believes using a technological system will add value and significantly improve work performance [34]. Although the literature on technology adoption generally agrees that PE strongly predicts BI [48, 50, 51], its role in AI-

based educational technology remains theoretically debated. In conventional VLs, PE relies on the efficiency of visual simulations in replicating real-world practical sessions [47]. However, when AI features are integrated, complex dynamics arise: on the one hand, automated AI feedback is perceived to enhance learning effectiveness; on the other hand, excessive automation has the potential to cause students to doubt the accuracy of the assistance or to worry about a reduction in independent learning experiences [52-54]. The lack of consensus on whether AI efficiency directly translates into improved academic performance in science experiments makes PE's role an issue that needs re-examination. To clarify this relationship in the context of AI-based VLs, the following hypothesis is proposed:

H1: PE has a substantial effect on BI regarding AI-based VLs.

3.1.2 Effort expectancy

EE represents the ease of using a system, with users' perceptions of minimal cognitive and technical load as key indicators [40]. Within the UTAUT framework, this construct is a key factor in explaining users' tendencies to accept and adopt new technologies [50, 55]. Empirically, various studies on AI [43] and virtual [47] laboratories confirm that a platform's accessibility and ease of use significantly increase users' intentions to adopt the technology. However, when these two technologies are integrated into a single AI-based VLs platform, the combination creates a relatively new form of hybrid innovation for students. This combination will create a new medium that feels unfamiliar and triggers cognitive overload in early adopters [56, 57]. Therefore, whether perceived ease (EE) can guarantee students' intention to adopt this new integrated product requires specific examination. Based on the premise above, the following hypothesis is proposed in this study:

H2: EE has a substantial effect on BI regarding AI-based VLs.

3.1.3 Social influence

Within the UTAUT framework, SI represents the degree to which individuals subjectively perceive those significant others—such as mentors, peers, or institutional authorities—believe using new technology systems is necessary [40]. Within this framework, this variable is regarded as one of the factors that could affect a person's decision to adopt and use technology. Empirical findings on the significance of SI for BI differ; in the context of VLs, it tends to show a strong positive influence due to collective norms and institutional instructions [58]. In contrast, general studies on AI adoption find this influence insignificant because of the more individual and autonomous nature of its use [59]. This inconsistency likely stems from differences in the usage environment—voluntary versus mandatory. However, in the context of innovative, academic AI-based VLs, this study hypothesizes that SI remains a crucial determinant, given that students tend to seek validation from peers and teaching authorities when adopting complex technologies. Therefore, this study proposes the hypothesis as follows:

H3: SI has a substantial effect on BI regarding AI-based VLs.

3.1.4 Facilitating conditions

FC is defined as a person's assessment of the availability of facilities, resources, and assistance that allow a person to use technology efficiently to perform particular tasks [40]. In the UTAUT model, this construct is a major factor affecting consumers' adoption and use of technology [34, 50, 51, 55]. The scientific consensus consistently identifies FC as critical determinants in the technology adoption ecosystem, as these variables encompass the availability of technical infrastructure and access to resource support—both crucial for reducing external barriers. Uniquely, in technology adoption models, FC explicitly possess dual predictive capacity; they not only play a role in strengthening BI but also act as direct stimulants that determine actual UB in adopting the innovation, especially in the context of VLs and AI [46, 50, 55]. Based on the findings of these studies, the research hypotheses are formulated as follows:

H4: FC has a substantial effect on BI regarding VLs.
H5: FC has a substantial effect on UB regarding AI-based VLs.

3.1.5 Hedonic motivation

HM is conceptualized as an affective dimension that represents the degree of pleasure, joy, or intrinsic satisfaction an individual experiences when interacting with a technological system [40]. This variable matters in technology acceptance discourse because it broadens analysis beyond the traditional utilitarian paradigm and emphasizes that users' emotional experiences are key determinants of innovation adoption. Theoretically, HM in the context of AI [46] and VLs [49] is strongly positively correlated with BI; the higher the recreational value and intrinsic appeal a platform offers, the more likely an individual is to adopt the technology sustainably.

Nevertheless, integrating VL simulations and AI has created a new product whose interface and interaction mechanisms are still unfamiliar to students. On the one hand, the involvement of dynamic visual simulations and AI has the potential to enhance recreational appeal [60, 61]; on the other hand, the academic demands of science and the need to adapt to a new intelligent system risk reducing comfort levels and transforming the learning experience into an activity that induces cognitive load [62, 63]. Therefore, the effectiveness of HM in driving adoption intentions for this hybrid product entity becomes a theoretical issue that requires specific examination. Based on these dynamics, we formulated the research hypothesis as follows:

H6: HM has a substantial effect on BI regarding AI-based VLs.

3.1.6 Behavioral intention

BI is described as the degree of preparedness or a person's conscious decision to execute, adopt, or continue utilizing a given behavior or technology in the future [34]. In the UTAUT model, this construct is regarded as a factor that directly affects users' actual technology adoption behavior. Research [46] indicates a strong theoretical consensus on a linear relationship between BI and UB. This relationship matters because intention is the primary cognitive antecedent that reflects an individual's motivational commitment to translate psychological dispositions into action. Based on these findings, the research hypothesis is formulated as follows:

H7: BI has a substantial effect on the UB of the AI-based VLs.

3.1.7 Use behavior

UB describes users' actual behavior in utilizing a

technology after forming an intention to use it. In this research, UB refers to the extent to which students use the AI-based VLs to support their academic activities and learning processes. According to studies [64, 65], UB relates to the extent to which users actually adopt AI technology for academic purposes. This reflects whether students integrate this technology into their routine learning activities, as explained in the study [48].

3.2 Participants

The survey's demographic profile section includes both age and gender. Table 1 displays the respondents' demographic characteristics.

3.3 Data collection method

The study population included all students enrolled in state and private senior secondary schools in Sukoharjo Regency, comprising 27 schools and a total of 18,069 students. Purposive sampling was employed to select schools that had already implemented AI-based VLs, resulting in 19 schools serving as research sites. A total of 1,300 paper-based questionnaires were distributed to students, with participation being voluntary. Of the 477 (36.69%) questionnaires returned, 10 were incomplete, yielding 467 (35.92%) valid responses for analysis and a response rate of 97.9%. This sample size exceeds the recommended minimum of N = 392 [66, 67].

3.4 Measurement instrument

This section describes the measurement instruments used to assess each research variable. The instrument was tailored to the specific characteristics of the AI-based VLs and the profiles of the target respondents. Indicators were synthesized from previous studies on general VLs and AI technology [43, 46-49], with terminology aligned to the AI-based VLs context. Additionally, the questionnaire from the study [48], originally intended to measure teachers' perceptions, was modified in terms of sentence structure and linguistic perspective to ensure relevance for upper secondary school students. These modifications ensured that each item accurately captured students' experiences with the intelligent features of AI-based VLs. Table 2 presents the adapted measurement items.

Table 1. Demographic profile

Items	Category	Frequency	Percentage
Age	15	223	47.75%
	16	197	42.18%
	17	47	10.06%
Gender	Male	134	28.69%
	Female	333	71.31%
Frequency of use	Once a month	0	0.00%
	2–3 times a month	176	37.69%
	Once a week	265	56.75%
	More than once a week	26	5.57%
Experience duration	Less than 6 months	379	81.16%
	6 months–1 year	86	18.42%
	1–2 years	2	0.43%
	More than 2 years	0	0.00%

Table 2. List of measurement items

Construct	Item Code	Measurement Items	Standardized Factor Loading	References
Performance expectancy	PE1	I feel that using the AI-based VLs will be beneficial for my learning.	0.769	[43, 47]
	PE2	Using the AI-based VLs will improve my chances of achieving my learning objectives.	0.901	
	PE3	Using the AI-based VLs will improve my understanding.	0.888	
Effort expectancy	EE1	I found it easy to learn how to operate the AI-based VLs.	0.891	[43, 47]
	EE2	I found the process of interacting with the AI-based VLs very simple and uncomplicated.	0.834	
	EE3	I feel capable of operating AI-based VL very smoothly.	0.838	
	EE4	I don't think it takes much effort to become skillful in utilizing AI-based VLs.	0.716	
Social influence	SI1	People who are important to me believe that I should use AI-based VLs.	0.808	[46, 47]
	SI2	My behavioral reference groups believe that I should utilize AI-based VLs.	0.907	
	SI3	Someone whose opinion I value, suggested that I use AI-based VL technology	0.86	
Facilitating conditions	FC1	The facilities and technical support necessary to use the AI-based VLs are available to me.	0.74	[46]
	FC2	I have sufficient technical understanding to operate AI-based VLs independently.	0.62	
	FC3	Other technology I use is compatible with the AI-based VLs.	0.625	
Hedonic motivation	HM1	Using the AI-based VLs is fun.	0.812	[46, 49]
	HM2	Using the AI-based VLs is enjoyable.	0.878	
	HM3	Using the AI-based VLs is very entertaining.	0.828	
Behavioral intention	BI1	I have a strong intention to continue integrating AI-based VLs into my future learning activities.	0.877	[46]
	BI2	In my daily life, I will continue to make an effort to use the AI-based VLs in my studies.	0.74	
	BI3	I would like to make extensive use of the AI-based VLs.	0.814	
Use behavior	UB1	I regularly use the AI-based VLs in my studies.	0.945	[48]
	UB2	I am currently using the AI-based VLs to assist me with my academic studies.	0.833	
	UB3	I spend a lot of time using the AI-based VLs during my studies.	0.836	

Note: VLs = virtual laboratories, AI = artificial intelligence.

Based on the results of the convergent validity analysis, there were two indicators with factor loadings below the minimum threshold of 0.50: FC4 (0.38) in the FC variable and UB4 (0.35) in the UB variable. Consequently, we removed these two items from the model. Removing the FC4 and UB4 indicators did not alter the overall construct structure of the model; instead, it increased the factor loadings of the remaining indicators and optimized the average variance extracted (AVE) and composite reliability values for both variables.

3.5 Model evaluation

This study used structural equation modeling (SEM) to evaluate the hypothetical model comprehensively and simultaneously. The procedure began with a reliability test using Cronbach's alpha to ensure high internal consistency for each latent construct. Next, we rigorously verified instrument validity through confirmatory factor analysis (CFA) to show that the empirical indicators accurately represent the intended theoretical dimensions. After the measurement model met the goodness-of-fit criteria, we conducted path analysis to test the significance of causal relationships, assess the strength of influence among variables, and statistically confirm the research hypotheses.

4. RESULTS

4.1 Measurement model analysis

Consistent with the SEM approach outlined previously, data analysis was conducted using IBM SPSS AMOS version 23. This method was selected because it identifies and corrects measurement errors, ensuring that constructs demonstrate adequate validity and reliability prior to estimating causal relationships. As a result, the path analysis produces more precise results and offers greater theoretical credibility than conventional statistical techniques [68].

Furthermore, we evaluated the model's goodness-of-fit in accordance with recommendations from [66] and supported by other studies [69, 70], which suggest using several fit indices, as shown in Table 3. A research model is considered to have a good level of fit if it meets several recommended criteria, including a comparative fit index (CFI) value of ≥0.90, a root mean square error of approximation (RMSEA) value of ≤0.05, and a root mean square residual (RMR) value within acceptable limits, thereby making the model suitable for further analysis [71]. Table 3 presents the results of these goodness-of-fit tests.

Table 3. Goodness-of-fit indices for the measurement model

Type of Fit Indices	Level of Fit	Values
RMR	near 0 (perfect fit)	0.012
NFI	≥0.90	0.936
RFI	≥0.90	0.922
IFI	≥0.90	0.962
TLI	≥0.90	0.953
CFI	≥0.90	0.962
RMSEA	<0.05 indicates goodness-of-fit	0.048

Note: RMR = root mean square residual; NFI = normed fit index; RFI = relative fit index; IFI = incremental fit index; TLI = Tucker–Lewis index; CFI = comparative fit index; RMSEA = root mean square error of approximation.

4.2 Reliability analysis

To ensure internal consistency, the study statistically evaluated instrument reliability using Cronbach's alpha as the main reliability indicator. According to established theoretical standards, a construct is considered to have adequate reliability if its coefficient value exceeds a threshold of 0.70 [66]. The reliability analysis showed that most constructs had Cronbach's alpha values exceeding the recommended threshold of 0.70, except for Facilitating Conditions (FC), which had a value of 0.664. However, the composite reliability (CR) value for FC was 0.701, meeting the recommended threshold. These results indicate that the constructs generally demonstrated acceptable reliability based on their composite reliability values. Therefore, the instrument is deemed reliable and suitable for proceeding to the next stage of inferential analysis.

4.3 Testing convergent and discriminant validity of measurement models

This study evaluated construct validity by systematically assessing convergent and discriminant validity. As shown in Table 4, six out of seven latent variables exhibited Average Variance Extracted (AVE) values exceeding the recommended threshold of 0.50. However, the Facilitating Conditions (FC) construct had an AVE value of 0.441, which did not meet the recommended criterion. Nevertheless, its Composite Reliability (CR) value of 0.701 exceeded the minimum threshold of 0.70, indicating acceptable internal consistency reliability. Overall, the results suggest that the constructs generally demonstrated satisfactory convergent validity, although the FC construct did not fully meet the recommended AVE criterion [66].

Table 4. Summary of validity and reliability

	PE	EE	SI	FC	HM	BI	UB	AVE	CR	CA
PE	0.855							0.731	0.890	0.855
EE	0.621	0.822						0.676	0.892	0.822
SI	0.675	0.627	0.859					0.738	0.894	0.859
FC	0.25	0.28	0.144	0.664				0.441	0.701	0.664
HM	0.648	0.408	0.416	0.364	0.839			0.705	0.878	0.840
BI	0.721	0.496	0.589	0.059	0.458	0.812		0.660	0.853	0.812
UB	0.711	0.438	0.527	0.055	0.445	0.648	0.873	0.762	0.905	0.873

Note: PE = performance expectancy; EE = effort expectancy; SI = social influence; FC = facilitating conditions; HM = hedonic motivation; BI = behavioral intention; UB = use behavior; AVE = average variance extracted; CR = composite reliability; CA = Cronbach's alpha.

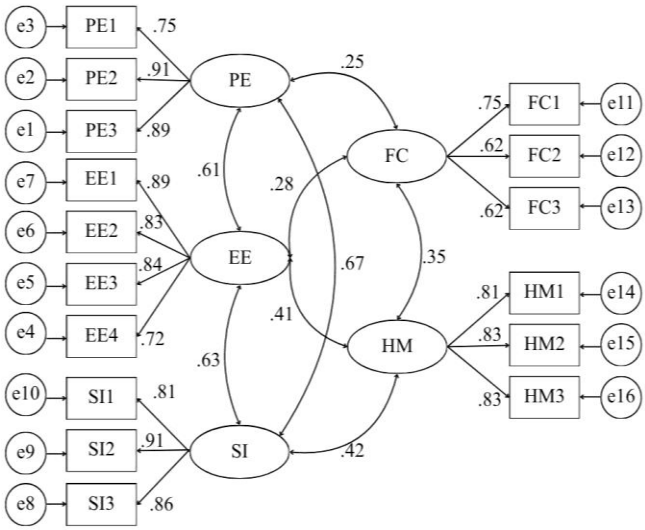

Figure 2. Verification of the measurement model on independent latent factors

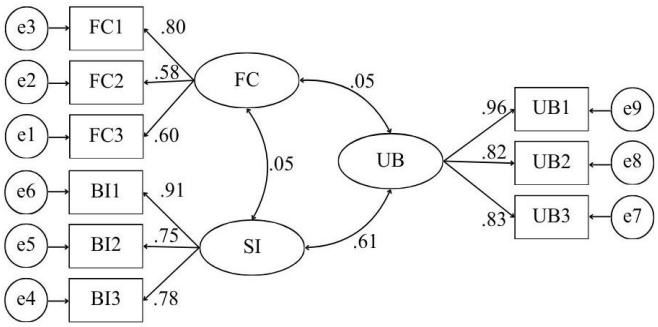

Figure 3. Verification of the measurement model on mediator and dependent latent factors

Furthermore, discriminant validity was assessed using the Fornell–Larcker criterion by comparing the square root of the AVE for each construct with its correlations with the other constructs. As presented in Table 4, the square root of the AVE for each construct was greater than its highest correlation with any other construct. Specifically, the square root of AVE values ranged from 0.664 to 0.873, whereas the corresponding highest inter-construct correlations ranged from 0.280 to 0.721. These findings indicate that all constructs satisfied the Fornell–Larcker criterion, thereby demonstrating adequate discriminant validity [72]. Figures 2 and 3 present visual representations of the UTAUT2 measurement model and the dependent and mediating variables, respectively.

4.4 Path analysis of the structural model

Path analysis in SEM assesses the study model's hypotheses and tests causal links between constructs. As shown in Table 5, this study tested 7 hypotheses developed from the previously established conceptual framework. Based on the results, most hypotheses received empirical support. However, two hypotheses, H4 and H5, did not show a substantial relationship and was therefore deemed unsupported or rejected. Table 5 presents a comprehensive breakdown of the hypothesis-testing outcomes.

The results in Table 5 indicate that PE significantly affects BI to implement AI VLs in upper secondary schools (β = 0.152, t = 10.621, p < 0.001). Therefore, hypothesis H1 is accepted. Furthermore, EE significantly affected BI regarding the use of AI-based VLs in upper secondary schools (β = 0.101, t = 8.14, p < 0.001), supporting hypothesis H2. The results also indicate that SI substantially affects BI regarding the use of AI-based VLs in upper secondary schools, with a β = 0.119, t = 9.234, and p < 0.001. Therefore, hypothesis H3 is accepted. Regarding hypotheses H4 and H5, we found that FC have no effect on BI or UB in the use of AI-based VLs in upper secondary schools, with values of β equal to 0.01, t-value of 0.998; and p-value of > 0.001 (p = 0.318) and β equal to 0.01, t-value of 0.961, and p-value of >0.001, (p = 0.336) respectively. Consequently, we cannot accept either hypothesis. Furthermore, the test for H6 indicates that HM is positively and significantly associated with BI regarding the use of AI-based VLs in upper secondary schools, with β = 0.091, t = 7.563, and p < 0.001. This finding supports Hypothesis H6. Furthermore, the test of Hypothesis H7 confirmed that BI has a positive and significant influence on UB, with β = 0.141, t = 9.792, and p < 0.001. These results indicate that the easier and more beneficial users perceive the AI-based VLs to be, the more positive their attitude toward using the system becomes. These results indicate that the higher a person's intention to use a technology, the more likely they are to use it in practice. In other words, the intention to use is a key factor driving the actual use of a system or technology.

Table 5. Structural model for hypothesis testing results

H	Independent	Dependent	Estimate	S.E.	C.R.	*p*-Value	Result
H1	PE	BI	0.152	0.014	10.621	***	supported
H2	EE	BI	0.101	0.012	8.14	***	supported
H3	SI	BI	0.119	0.013	9.234	***	supported
H4	FC	BI	0.01	0.01	0.998	0.318	rejected
H5	FC	UB	0.01	0.01	0.961	0.336	rejected
H6	HM	BI	0.091	0.012	7.563	***	supported
H7	BI	UB	0.141	0.014	9.792	***	supported

Note: *** p < 0.001. S.E. = standard error; C.R. = critical ratio; PE = performance expectancy; EE = effort expectancy; SI = social influence; FC = facilitating conditions; HM = hedonic motivation; BI = behavioral intention; UB = use behavior.

Table 6. Evaluation of the coefficient of determination

Dependent Variable	R^2 Value	Percentage of Variance	Evaluation Category
BI	0.556	55.6%	moderate
UB	0.455	45.5%	moderate

Note: BI = behavioral intention; UB = use behavior; R^2 = coefficient of determination.

A structural model evaluation was carried out to measure the explanatory power of the independent variables on the dependent variable using the coefficient of determination (R^2). A summary of the R^2 test results, obtained using IBM SPSS AMOS, is presented in Table 6.

The analysis shows an R^2 value of 0.556 for the BI construct. This indicates that the exogenous variables—PE,

EE, SI, FC, and HM—collectively explain 55.6% of the variance in students' behavioral intention to adopt AI-based VLs. According to Hair et al. [66], this value indicates a moderate level of explanatory power, suggesting that the proposed UTAUT2-based model provides a meaningful explanation of students' adoption intentions.

Similarly, the UB construct yielded an R^2 value of 0.455, indicating that behavioral intention explains 45.5% of the variance in students' actual use behavior. This result also represents a moderate level of explanatory power. The finding suggests that students' behavioral intentions play an important role in explaining their actual use of AI-based VLs. However, the remaining 54.5% of the variance may be associated with other factors not included in the proposed model

Overall, these findings indicate that the proposed model explains a substantial proportion of the variance in both behavioral intention and actual use behavior. The results support the relevance of the modified UTAUT2 framework in explaining students' acceptance and use of AI-based virtual laboratories.

5. DISCUSSION

This study reviewed and analyzed recent research on the acceptance of AI VLs to support the research objectives. Based on these findings, the study developed a comprehensive structural model to examine students' acceptance of technology.

Research on technology acceptance in education has extensively used UTAUT2 for both VL technology and AI-based systems. However, most of these studies still examine the two technologies separately.

Meanwhile, current developments in learning technology are beginning to integrate these two technologies into a single system: VLs equipped with AI-based features [73-78]. To this end, this study aims to develop the research by investigating the acceptance level of AI-based VLs, thereby demonstrating their use through the UTAUT2 model.

The discussion of the research findings indicates that the first step undertaken was to test the correlation between PE and BI based on the structural model employed. The results reveal a strong relationship between PE and BI regarding the use of AI-based VLs. Based on these findings, PE significantly influences students' acceptance of AI-based VLs.

As shown in Table 3 and Table 5, the research findings in the study [79] support Hypothesis H1, which states that PE is related to BI. These results suggest that PE influences users' intentions to acquire or use the technology in the future. These findings show that students plan to use the system because they believe it will provide real advantages for their educational endeavors.

Secondly, this study examined the relationship between EE and BI based on the structural model employed in the research. The results show that users' views of the effort required affect their intentions to use AI-based VLs. This outcome aligns with earlier research findings, as reported in studies [79-81]. This implies that users are more likely to want to stick with a technology if they believe it is simple to learn or use.

This study confirmed Hypothesis H3, the relationship between SI and BI. This finding is consistent with several previous studies examining students' intentions to use learning technologies, such as VLs [44, 50] and AI [82], all of which show that SI affects BI. The results indicate that students' use of AI-based VLs is largely influenced by the people around them whom they consider important. This is consistent with the original UTAUT hypothesis. Today, every individual is part of society and cannot live in isolation. In this context, people are more frequently influenced by their external social groups [44]. Furthermore, recommendations from highly influential individuals will influence their use of AI-based VLs. In this exploration, community influence makes learners more willing to use AI-based VLs.

Hypothesis H4 proposed that FC positively influences BI to adopt an AI-based VL. However, the results showed no relationship between FC and BI in using an AI-based VL. Therefore, this hypothesis is considered unsupported or rejected. Furthermore, the fifth hypothesis (H5) tested the relationship between FC and UB in using an AI-based VL. However, the results also showed no significant relationship between these two variables; consequently, the data do not support this hypothesis either. These findings differ from several previous studies on the acceptance of VLs [49] and AI-based technologies [83, 84], which generally indicate a positive relationship between FC and BI or UB. Those studies identified resource availability, technical support, and users' ability to operate the system as key factors influencing technology acceptance.

This lack of significance is explained by two main aspects: methodological and contextual. Methodologically, the FC variable in this study has limited measurement quality, with an AVE value below 0.50. The magnitude of error variance in the measurement indicators triggers an attenuation effect, which pushes the path coefficient toward zero and reduces statistical power to detect relationships between variables.

In context, technical facilities such as internet connectivity and access to hardware within the school ecosystem where the research took place are perceived by pupils as uniform basic prerequisites (hygiene factors or operational prerequisites), rather than primary motivators that directly boost usage intention or frequency. These outcomes are supported by research [85-87], which confirms that once basic facilities are available, technology adoption is driven primarily by intrinsic variables such as perceived usefulness and system ease of use.

The results also show that HM has a positive and significant effect on BI; thus, Hypothesis H6 is accepted. This finding is consistent with previous studies that used UTAUT2 in the context of VL adoption [88] and AI [83], which show that enjoyment, convenience, and pleasant experiences when using technology are major factors shaping users' intentions to use such technology. In the context of AI-based VLs, this influence can be explained by the fact that students tend to feel engaged when the learning technology offers a new, innovative, interactive learning experience that differs from the conventional learning media they are accustomed to. The presence of AI features capable of providing adaptive responses, more dynamic simulations, and more engaging exploration experiences allows students to experience an element of enjoyment in the learning process; thus, the higher the level of enjoyment students feel while using the system, the greater their intention to accept and continue using the technology. Therefore, the results further confirm that an enjoyable learning experience is a key determinant of students' acceptance of AI-based VLs.

The seventh hypothesis was accepted, indicating that BI has a positive and significant effect on UB. These results show that the higher students' intention to use AI-based VLs, the greater their tendency to actually use this technology in learning

activities. In this research model, BI not only directly influences UB but also mediates the effects of PE, EE, SI, and HM on actual usage behavior. This means that students' perceptions of the technology's benefits, ease of use, the influence of their social environment, and enjoyable learning experiences first shape their intention to use the system, which then drives actual usage. These findings align with the UTAUT2, which positions BI as the primary predictor of technology usage behavior [40]. This follows because, fundamentally, a person will not use a technology unless they have developed the desire, readiness, and internal decision to use it. In the context of AI-based VLs—which are still considered a new technology for students—when students have a strong intention to try and utilize the technology, that intention will naturally manifest in actual usage behavior during the learning process.

6. CONCLUSIONS

This study validated a technology acceptance model based on UTAUT2, modified to analyze the factors influencing high school students' acceptance of AI-based VLs. The research contributes new insights by examining technology acceptance in the context of VLs integrated with AI, whereas most prior studies have considered these technologies separately. The results indicate that PE, EE, SI, and HM positively and significantly affect BI, which subsequently influences students' UB. These findings suggest that ease of use, SI, and an engaging learning experience are primary drivers of acceptance for AI-based VLs. In contrast, FC did not demonstrate a significant effect, suggesting that students do not yet view technical support or infrastructure as primary considerations when adopting this technology. The study offers preliminary insights for system developers and secondary school educators regarding factors influencing acceptance of AI-based VLs. However, as the research focuses on senior secondary school students in Indonesia, the practical implications are context-specific. Generalization to other educational levels is not warranted. Further research is recommended to test this model across broader educational levels and geographic regions, and to explore additional variables for a more comprehensive understanding of AI technology adoption in learning.

ACKNOWLEDGMENT

We want to thank the Lembaga Penelitian dan Pengabdian kepada Masyarakat (LPPM) at Universitas Sebelas Maret for its financial support through the grant program with contract number 973.1/UN27.22/PT.01.03/2026. The author sincerely appreciates the facilities and assistance provided, which enabled this study to be carried out successfully.

REFERENCES

[1] Raman, R., Achuthan, K., Nair, V.K., Nedungadi, P. (2022). Virtual laboratories: A historical review and bibliometric analysis of the past three decades. Education and Information Technologies, 27: 11055-11087. https://doi.org/10.1007/s10639-022-11058-9

[2] Gomes, L., Bogosyan, S. (2009). Current trends in remote laboratories. IEEE Transactions on Industrial Electronics, 56(12): 4744-4756. https://doi.org/10.1109/TIE.2009.2033293

[3] Novaliendry, D., Rahmani, A., SriWahyuni, T., Fajri, B.R. (2023). Web-based virtual laboratory design in Class XI chemistry subject. International Journal of Online and Biomedical Engineering, 19(17): 4-18. https://doi.org/10.3991/ijoe.v19i17.45491

[4] Coutinho, G.S., Magana, A.J., do Rego Dias, V. (2023). A framework for the development of online virtual labs for engineering education. In 2023 ASEE Annual Conference & Exposition, Baltimore, Maryland, pp. 1-18. https://doi.org/10.18260/1-2--42396

[5] Deriba, F.G., Saqr, M., Tukiainen, M. (2024). Assessment of accessibility in virtual laboratories: A systematic review. Frontiers in Education, 9: 1351711. https://doi.org/10.3389/feduc.2024.1351711

[6] Li, J.X., Liang, W.H. (2024). Effectiveness of virtual laboratory in engineering education: A meta-analysis. PLoS ONE, 19(12): e0316269. https://doi.org/10.1371/journal.pone.0316269

[7] Zhang, X.Y., Al-Mekhled, D., Choate, J. (2021). Are virtual physiology laboratories effective for student learning? A systematic review. Advances in Physiology Education, 45(3): 467-480. https://doi.org/10.1152/ADVAN.00016.2021

[8] Meronda, D.A., Widarti, H.R., Yahmin, Y. (2025). Virtual laboratories in science education: A systematic review of effectiveness on conceptual understanding and learning outcomes. Jurnal Pendidikan MIPA, 26(3): 2020-2042. https://doi.org/10.23960/jpmipa.v26i3.pp2020-2042

[9] Safaeipour, R., Aalaa, M., Mojtahedzadeh, R., Mohammadi, A., Asadzandi, S., Mousavi, A. (2025). Virtual or blended laboratories for healthcare students education: A systematized review. BMC Medical Education, 25: 1352. https://doi.org/10.1186/s12909-025-07937-7

[10] Oliveira, H., Bonito, J. (2023). Practical work in science education: A systematic literature review. Frontiers in Education, 8: 1151641. https://doi.org/10.3389/feduc.2023.1151641

[11] Klami, A., Damoulas, T., Engkvist, O., Rinke, P., Kaski, S. (2024). Virtual laboratories: Transforming research with AI. Data-Centric Engineering, 5: e19. https://doi.org/10.1017/dce.2024.15

[12] Bakri, H. (2025). AI-driven adaptive pathways in virtual learning environments: A PRISMA-based systematic literature. Information Technology Education Journal, 4(3): 571-581. https://doi.org/10.59562/intec.v4i3.10515

[13] Wang, S., Wang, F., Zhu, Z., Wang, J.X., Tran, T., Du, Z. (2024). Artificial intelligence in education: A systematic literature review. Expert Systems with Applications, 252: 124167. https://doi.org/10.1016/j.eswa.2024.124167

[14] Yannier, N., Hudson, S.E., Chang, H., Koedinger, K.R. (2024). AI adaptivity in a mixed-reality system improves learning. International Journal of Artificial Intelligence in Education, 34: 1541-1558. https://doi.org/10.1007/s40593-023-00388-5

[15] Lim, L., Bannert, M., van der Graaf, J., et al. (2023). Effects of real-time analytics-based personalized scaffolds on students' self-regulated learning. Computers in Human Behavior, 139: 107547.

https://doi.org/10.1016/j.chb.2022.107547
[16] Villegas-Ch, W., Buenano-Fernandez, D., Navarro, A.M., Mera-Navarrete, A. (2025). Adaptive intelligent tutoring systems for STEM education: Analysis of the learning impact and effectiveness of personalized feedback. Smart Learning Environments, 12: 41. https://doi.org/10.1186/s40561-025-00389-y
[17] Lin, C.C., Huang, A.Y.Q., Lu, O.H.T. (2023). Artificial intelligence in intelligent tutoring systems toward sustainable education: A systematic review. Smart Learning Environments, 10: 41. https://doi.org/10.1186/s40561-023-00260-y
[18] Chen, L.J., Chen, P.P., Lin, Z.J. (2020). Artificial intelligence in education: A review. IEEE Access, 8: 75264-75278. https://doi.org/10.1109/ACCESS.2020.2988510
[19] Yekollu, R.K., Bhimraj Ghuge, T., Sunil Biradar, S., Haldikar, S.V., Farook Mohideen Abdul Kader, O. (2024). AI-driven personalized learning paths: Enhancing education through adaptive systems. In Smart Data Intelligence. ICSMDI 2024. Algorithms for Intelligent Systems. Springer, Singapore, pp. 507-517. https://doi.org/10.1007/978-981-97-3191-6_38
[20] Alam, A., Mohanty, A. (2023). Educational technology: Exploring the convergence of technology and pedagogy through mobility, interactivity, AI, and learning tools. Cogent Engineering, 10(2): 2283282. https://doi.org/10.1080/23311916.2023.2283282
[21] Strielkowski, W., Grebennikova, V., Lisovskiy, A., Rakhimova, G., Vasileva, T. (2025). AI-driven adaptive learning for sustainable educational transformation. Sustainable Development, 33(2): 1921-1947. https://doi.org/10.1002/sd.3221
[22] Bogusevschi, D., Muntean, C., Muntean, G.M. (2020). Teaching and learning physics using 3D virtual learning environment: A case study of combined virtual reality and virtual laboratory in secondary school. Journal of Computers in Mathematics and Science Teaching, 39(1): 5-18. https://doi.org/10.70725/297454nsjryb
[23] Potkonjak, V., Gardner, M., Callaghan, V., et al. (2016). Virtual laboratories for education in science, technology, and engineering: A review. Computers & Education, 95: 309-327. https://doi.org/10.1016/j.compedu.2016.02.002
[24] Kolil, V., Achuthan, K. (2024). Virtual labs in chemistry education: A novel approach for increasing students' laboratory educational consciousness and skills. Education and Information Technologies, 29: 25307-25331. https://doi.org/10.1007/s10639-024-12858-x
[25] Groenewald, E.S., Kumar, N., Avinash, Irfan, S., Yerasuri, S. (2024). Virtual laboratories enhanced by AI for hands-on informatics learning. Journal of Informatics Education and Research, 4(1): 560-568. https://doi.org/10.52783/jier.v4i1.600
[26] Wang, C., Yin, X.X., Wang, Z. (2024). Research on the application of artificial intelligence and virtual reality technology in intelligent education interactive system. In 2024 2nd International Conference on Mechatronics, IoT and Industrial Informatics (ICMIII), Melbourne, Australia, pp. 517-521. https://doi.org/10.1109/ICMIII62623.2024.00102
[27] Taylor, R., Fakhimi, M., Ioannou, A., Spanaki, K. (2025). Personalized learning in education: A machine learning and simulation approach. Benchmarking: An International Journal, 32(7): 2662-2689. https://doi.org/10.1108/BIJ-06-2023-0380
[28] Budiman, R.D.A., Surjono, H.D., Wagiran, et al. (2025). Effectiveness of AI-driven assessments in enhancing learning evaluation through predictive technology in vocational secondary school. International Journal of Information and Education Technology, 15(7): 1410-1417. https://doi.org/10.18178/ijiet.2025.15.7.2342
[29] Muthmainnah, Ibna Seraj, P.M., Oteir, I. (2022). Playing with AI to investigate human-computer interaction technology and improving critical thinking skills to pursue 21st century age. Education Research International, 2022(1): 6468995. https://doi.org/10.1155/2022/6468995
[30] Seker, O., Kwon, K., Kocak, O. (2025). Exploring researchers' artificial intelligence (AI) literacy: The mediating role of digital literacy and data literacy between 21st century skills and AI literacy. Information Development. https://doi.org/10.1177/02666669251336368
[31] Davis, F.D. (1989). Perceived usefulness, perceived ease of use, and user acceptance of information technology. MIS Quarterly, 13(3): 319-340. https://doi.org/10.2307/249008
[32] Al-Rahmi, A.M., Shamsuddin, A., Alismaiel, O.A. (2020). Task-technology fit model: The factors affecting students' academic performance in higher education. Universal Journal of Educational Research, 8(12): 6831-6843. https://doi.org/10.13189/ujer.2020.081249
[33] Hill, R.J., Fishbein, M., Ajzen, I. (1977). Belief, attitude, intention and behavior: An introduction to theory and research. Contemporary Sociology, 6(2): 244-245. https://doi.org/10.2307/2065853
[34] Venkatesh, V., Morris, M.G., Davis, G.B., Davis, F.D. (2003). User acceptance of information technology: Toward a unified view. MIS Quarterly, 27(3): 425-478. https://doi.org/10.2307/30036540
[35] Ajzen, I. (1991). The theory of planned behavior. Organizational Behavior and Human Decision Processes, 50(2): 179-211. https://doi.org/10.1016/0749-5978(91)90020-T
[36] Almaiah, M.A., Alamri, M.M., Al-Rahmi, W. (2019). Applying the UTAUT model to explain the students' acceptance of mobile learning system in higher education. IEEE Access, 7: 174673-174686. https://doi.org/10.1109/ACCESS.2019.2957206
[37] Yanto, D.T.P., Sukardi, Kabatiah, M., Zaswita, H., Candra, O. (2023). Analysis of factors affecting vocational students' intentions to use a virtual laboratory based on the technology acceptance model. International Journal of Interactive Mobile Technologies, 17(12): 94-111. https://doi.org/10.3991/ijim.v17i12.38627
[38] Tamilmani, K., Rana, N.P., Dwivedi, Y.K. (2019). Use of 'habit' is not a habit in understanding individual technology adoption: A review of UTAUT2 based empirical studies. In Smart Working, Living and Organising. TDIT 2018. IFIP Advances in Information and Communication Technology, Springer, Cham, pp. 277-294. https://doi.org/10.1007/978-3-030-04315-5_19
[39] Venkatesh, V., Davis, F.D., Zhu, Y.P. (2023). Competing roles of intention and habit in predicting behavior: A comprehensive literature review, synthesis, and longitudinal field study. International Journal of Information Management, 71: 102644.

https://doi.org/10.1016/j.ijinfomgt.2023.102644
[40] Venkatesh, V., Thong, J.Y.L., Xu, X. (2012). Consumer acceptance and use of information technology: Extending the unified theory of acceptance and use of technology. MIS Quarterly, 36(1): 157-178. https://doi.org/10.2307/41410412
[41] Grassini, S., Aasen, M.L., Møgelvang, A. (2024). Understanding university students' acceptance of ChatGPT: Insights from the UTAUT2 model. Applied Artificial Intelligence, 38(1): 2371168. https://doi.org/10.1080/08839514.2024.2371168
[42] Tamilmani, K., Rana, N., Dwivedi, Y., Sahu, G.P., Roderick, S. (2018). Exploring the role of "price value" for understanding consumer adoption of technology: A review and meta-analysis of UTAUT2-based empirical studies. PACIS 2018 Proceedings, 64. https://aisel.aisnet.org/pacis2018/64/.
[43] Valle, N.N., Kilat, R.V., Lim, J., et al. (2024). Modeling learners' behavioral intention toward using artificial intelligence in education. Social Sciences & Humanities Open, 10: 101167. https://doi.org/10.1016/j.ssaho.2024.101167
[44] Sun, L., Xu, D.Y. (2023). Research on influencing factors of distance learning behavior intention in virtual experimental environment. International Journal of Information and Education Technology, 13(10): 1638-1645. https://doi.org/10.18178/ijiet.2023.13.10.1972
[45] Çivril, H., Özkul, A.E. (2021). Investigation of the factors affecting open and distance education learners' intentions to use a virtual laboratory. The International Review of Research in Open and Distributed Learning, 22(2): 143-165. https://doi.org/10.19173/irrodl.v22i2.5076
[46] Caffaratti, L.B., Longobardi, C., Badenes-Ribera, L., Marengo, D. (2025). AI adoption among adolescents in education: extending the UTAUT2 with psychological and contextual factors. Frontiers in Artificial Intelligence, 8: 1614993. https://doi.org/10.3389/frai.2025.1614993
[47] Sayginer, C. (2023). Acceptance and use of cloud-based virtual platforms by higher education vocational school students: Application of the UTAUT model with a PLS-SEM approach. Innoeduca International Journal of Technology and Educational Innovation, 9(2): 24-38. https://doi.org/10.24310/innoeduca.2023.v9i2.15647
[48] Mistry, A., Jhala, P., Maheta, D., Khatwani, R. (2025). Adoption and use of artificial intelligence tools in education: A UTAUT2-based study of school and university students in Surat city. Discover Education, 4: 551. https://doi.org/10.1007/s44217-025-00979-5
[49] Sukmawati, F., Santosa, E.B., Juwita, R., Cahyono, B.T., Trisnaningsih, S., Ridhani, J. (2024). The exploration of science teacher's acceptance towards virtual laboratory (VL). Multidisciplinary Science Journal, 6(12): 2024274. https://doi.org/10.31893/multiscience.2024274
[50] Bazelais, P., Binner, G., Doleck, T. (2024). Examining the key drivers of student acceptance of online labs. Interactive Learning Environments, 32(4): 1460-1475. https://doi.org/10.1080/10494820.2022.2121729
[51] Yee, M.L.S., Abdullah, M.S. (2021). A review of UTAUT and extended model as a conceptual framework in education research. Jurnal Pendidikan Sains Dan Matematik Malaysia, 11: 1-20. https://doi.org/10.37134/jpsmm.vol11.sp.1.2021
[52] Sajja, R., Sermet, Y., Fodale, B., Demir, I. (2026). Evaluating AI-powered learning assistants in engineering higher education with implications for student engagement, ethics, and policy. Scientific Reports, 16: 7565. https://doi.org/10.1038/s41598-026-39237-5
[53] Singh, H.P., Aziz, A.A. (2025). Impact of intelligent learning assistants on creativity of university students: A self-determination theory perspective. Future Business Journal, 11: 122. https://doi.org/10.1186/s43093-025-00544-4
[54] Pitts, G., Motamedi, S. (2025). Understanding human-AI trust in education. Telematics and Informatics Reports, 20: 100270. https://doi.org/10.1016/j.teler.2025.100270
[55] Agyemang, A.Y.K., Ossei-Anto, T.A., Acheampong, A. (2025). Exploring factors influencing the acceptance of dry lab technologies in Ghanaian senior high schools: IPMA insights on the influence of technology familiarity. Journal of Research in Science, Mathematics and Technology Education, 8(SI): 103-134. https://doi.org/10.31756/jrsmte.415SI
[56] McLay, K.F., Thomasse, L., Reyes, V.C. (2023). Embracing discomfort in active learning and technology-rich higher education settings: Sensemaking through reflexive inquiry. Educational Technology Research and Development, 71: 1161-1177. https://doi.org/10.1007/s11423-023-10192-6
[57] Almaiah, M.A., Alfaisal, R., Salloum, S.A., et al. (2022). Examining the impact of artificial intelligence and social and computer anxiety in e-learning settings: Students' perceptions at the university level. Electronics, 11(22): 3662. https://doi.org/10.3390/electronics11223662
[58] Qudratuddarsi, H., Rahmah, N., Indriyanti, N., Jumriani, Munawwarah. (2025). Analysis of the attitudes of Generation Z prospective science teachers toward the chemistry virtual laboratory. Arfak Chem: Chemistry Education Journal, 8(1): 651-665. https://doi.org/10.30862/accej.v8i1.922
[59] Sibug, V.B., Fernando, E.Q., Gamboa, A.B., et al. (2026). Exploring the adoption intention in using AI-enabled educational tools among preservice teachers in the Philippines: A partial-least square modeling. In Proceedings of the 2025 9th International Conference on Education and Multimedia Technology, Osaka, Japan, pp. 287-292. https://doi.org/10.1145/3761843.3761880
[60] Ge, Y.L., Wang, H.F., Wang, D.X., Yang, B. (2026). AI-enhanced virtual laboratories improve learning outcomes and student engagement in food microbiology education. Scientific Reports, 16: 22792. https://doi.org/10.1038/s41598-026-54068-0
[61] Ben-Zion, Y., Carroll, T.K., West, C.G., Wong, J., Finkelstein, N.D. (2026). Leveraging generative artificial intelligence for simulation-based physics experiments: A new approach to virtual learning about the real world. Physical Review Physics Education Research, 22(1): 010109. https://doi.org/10.1103/s8dy-kqy5
[62] Ali, N., Ullah, S., Khan, D. (2022). Interactive laboratories for science education: A subjective study and systematic literature review. Multimodal Technologies and Interaction, 6(10): 85. https://doi.org/10.3390/mti6100085
[63] Martin, A.J., Collie, R.J., Kennett, R., et al. (2025). Integrating generative AI and load reduction instruction

to individualize and optimize students' learning. Learning and Individual Differences, 121: 102723. https://doi.org/10.1016/j.lindif.2025.102723
[64] Sasikala, P., Ravichandran, R. (2024). Study on the impact of artificial intelligence on student learning outcomes. Journal of Digital Learning and Education, 4(2): 145-155. https://doi.org/10.52562/jdle.v4i2.1234
[65] Karataş, F., Eriçok, B., Tanrikulu, L. (2024). Reshaping curriculum adaptation in the age of artificial intelligence: Mapping teachers' AI-driven curriculum adaptation patterns. British Educational Research Journal, 51(1): 154-180. https://doi.org/10.1002/berj.4068
[66] Hair, J.F., Sarstedt, M., Ringle, C.M., Mena, J.A. (2012). An assessment of the use of partial least squares structural equation modeling in marketing research. Journal of the Academy of Marketing Science, 40: 414-433. https://doi.org/10.1007/s11747-011-0261-6
[67] Slonim, M.J. (1960). Sampling in a Nutshell. Simon and Schuster, New York.
[68] Syafiq, M., Sirojuzilam, Badaruddin, Purwoko, A. (2022). Integrated structural equation modeling and causal steps in evaluating the role of the mediating variable. MethodsX, 9: 101777. https://doi.org/10.1016/j.mex.2022.101777
[69] Chow, Y.S., Teicher, H. (1997). Probability Theory: Independence, Interchangeability, Martingales. Springer New York, NY. https://doi.org/10.1007/978-1-4612-1950-7
[70] Byrne, B.M. (2013). Structural Equation Modeling with Mplus: Basic Concepts, Applications, and Programming. New York: Routledge. https://doi.org/10.4324/9780203807644
[71] Kline, R.B. (2018). Response to Leslie Hayduk's review of principles and practice of structural equation modeling, 4th edition. Canadian Studies in Population, 45(3-4): 188-195. https://doi.org/10.25336/csp29418
[72] Fornell, C., Larcker, D.F. (1981). Evaluating structural equation models with unobservable variables and measurement error. Journal of Marketing Research, 18(1): 39-50. https://doi.org/10.1177/002224378101800104
[73] Qawaqneh, H., Ahmad, F.B., Alawamreh, A.R. (2023). The impact of artificial intelligence-based virtual laboratories on developing students' motivation towards learning mathematics. International Journal of Emerging Technologies in Learning, 18(14): 105-121. https://doi.org/10.3991/ijet.v18i14.39873
[74] Chen, B.J., Chen, C.M., Huang, C.L. (2024). A virtual 3D chemistry laboratory with an enhanced AI chatbot to facilitate learning effectiveness. In 2024 16th IIAI International Congress on Advanced Applied Informatics (IIAI-AAI), Takamatsu, Japan, pp. 718-719. https://doi.org/10.1109/IIAI-AAI63651.2024.00151
[75] Osmanli, T. (2025). AI-enhanced predictive modelling of virtual laboratory microlearning in online distance education. Ingenierie des Systemes d'Information, 30(9): 2461-2471. https://doi.org/10.18280/isi.300920
[76] Taylor, M.V., Muwaffak, Z., Penny, M.R., et al. (2025). Optimising digital twin laboratories with conversational AIs: Enhancing immersive training and simulation through virtual reality. Digital Discovery, 4(5): 1134-1141. https://doi.org/10.1039/d4dd00330f
[77] Lizano-Sánchez, F., Idoyaga, I.J., Orduna, P., Rodriguez-Gil, L., Arguedas-Matarrita, C. (2025). Students' interactions with an artificial intelligence assistant in a remote chemistry laboratory. Frontiers in Education, 10: 1712743. https://doi.org/10.3389/feduc.2025.1712743
[78] Murali, R., Ravi, N., Surendran, A. (2024). Augmenting virtual labs with artificial intelligence for hybrid learning. In 2024 IEEE Global Engineering Education Conference (EDUCON), Kos Island, Greece, pp. 1-10. https://doi.org/10.1109/EDUCON60312.2024.10578649
[79] Yakubu, M.N., David, N., Abubakar, N.H. (2025). Students' behavioural intention to use content generative AI for learning and research: A UTAUT theoretical perspective. Education and Information Technologies, 30: 17969-17994. https://doi.org/10.1007/s10639-025-13441-8
[80] Alshammari, S.H., Krishna, S., Alghamdi, B.A. (2026). The mediating role of engagement in the relationship between performance expectancy, effort expectancy, and students' behavioral intention to use ChatGPT. Acta Psychologica, 263: 106270. https://doi.org/10.1016/j.actpsy.2026.106270
[81] Hussain Akbar, M.A., Ali, M.H., Deli, M.M., Alawi, H. (2023). The intention to adopt e-learning using UTAUT-3 model: A post COVID-19 perspective. International Journal of Business and Society, 24(3): 1266-1283. https://doi.org/10.33736/ijbs.6373.2023
[82] Milicevic, N., Kalas, B., Djokic, N., Malcic, B., Djokic, I. (2024). Students' intention toward artificial intelligence in the context of digital transformation. Sustainability, 16(9): 3554. https://doi.org/10.3390/su16093554
[83] Cortez, P.M., Ong, A.K.S., Diaz, J.F.T., German, J.D., Singh Jagdeep, S.J.S. (2024). Analyzing preceding factors affecting behavioral intention on communicational artificial intelligence as an educational tool. Heliyon, 10(3): e25896. https://doi.org/10.1016/j.heliyon.2024.e25896
[84] Kavitha, K., Joshith, V.P. (2024). Factors shaping the adoption of AI tools among Gen Z: An extended UTAUT2 model investigation using CB-SEM. Bulletin of Science, Technology & Society, 44(1-2): 12-32. https://doi.org/10.1177/02704676241283362
[85] Bervell, B., Kumar, J.A., Arkorful, V., Agyapong, E.M., Osman, S. (2022). Remodelling the role of facilitating conditions for Google Classroom acceptance: A revision of UTAUT2. Australasian Journal of Educational Technology, 38(1): 115-135. https://doi.org/10.14742/ajet.7178
[86] Samsudeen, S.N., Mohamed, R. (2019). University students' intention to use e-learning systems: A study of higher educational institutions in Sri Lanka. Interactive Technology and Smart Education, 16(3): 219-238. https://doi.org/10.1108/itse-11-2018-0092
[87] Chun, T.W., Yunus, M.M. (2023). Factors affecting Malaysian ESL teachers' behavioral intentions for technology use in the post-COVID-19 era. Frontiers in Psychology, 14: 1127272. https://doi.org/10.3389/fpsyg.2023.1127272
[88] İbili, E., Ölmez, M., Cihan, A., et al. (2024). Investigation of learners' behavioral intentions to use metaverse learning environment in higher education: A virtual computer laboratory. Interactive Learning Environments, 32(10): 5893-5918. https://doi.org/10.1080/10494820.2023.2240860