AMSE JOURNALS-AMSE IIETA publication-2017-Series: Modelling B; Vol. 86; N°3; pp 679-705
Submitted Oct. 31, 2017; Revised Jan. 04, 2018; Accepted Jan. 12, 2018
https://doi.org/10.18280/mmc_b.860306

Thermo-mechanical Analysis of Gas Turbine Casing to Enhance Fatigue Life

* Mohammed Sirajuddin, **Asif Afzal

*Department of Mechanical Engineering, P. A. College of Engineering (Affiliated to Visvesvaraya Technological University), Mangaluru, INDIA

** Department of Mechanical Engineering, P. A. College of Engineering (Affiliated to Visvesvaraya Technological University), Mangaluru, INDIA, (asif.afzal86@gmail.com)

Abstract

The vulnerability of gas turbine casings is the area which are found to be the geometries featuring sudden or abrupt changes, such as holes and cross sections. Thermal and mechanical fatigue, which is being exerted on the casing by virtue of factors such as mechanical vibration, thermal cyclic loads and mechanical loads, the fatigue life cycle of the casing is on stake. At the same time, fatigue life of casing is also influenced by the tension exerted by the bolt during assembly called “bolt pre-tension”. This work is aimed to address the effect of bolt pre-tension on fatigue life of gas turbine casing taking accountability of its impact. The existing casing is analysed for impact of parameters such as pressure, bolt pre-tension and deformation and is being coupled with thermal boundary conditions and the model is analysed in ANSYS workbench. Based on the results of existing design, casing had to be modified geometrically so that its fatigue life is enhanced. From the analysis, it was found that the fatigue life of modified casing was 16533 cycles more than the fatigue life of existing casing for the same boundary conditions of bolt pre-tension of 1000 N and pressure of 3 MPa.

Key words

Gas turbine casing, Bolt pre-tension, Total deformation, Equivalent stress, Fatigue life, Fatigue stress.

1. Introduction

Gas turbines essentially consist of stationary and rotary components which are being encased in a structure called “casing” generally a steel structure or steel casing. It is one among the major components of engine stator and its appropriate design efficiently controls the radial displacement of rotor and stator and the weight which indirectly improves the efficiency of engine and reliability [1], [2].The major issue with casing is that it has to be designed in such a way that it must be safeguarded from thermal stresses. During starting, shutting down and load variation in many turbines component, unstable condition arises that leads to distribution of transient temperature [3]–[5]. Due to sudden increase in temperature, thermal stresses are formed which leads to failure and reduced life. The stator and rotor of these turbines are enclosed in huge steel casings which are porn to cracking due to low thermo-mechanical fatigue life [6], [7]. These cracking can lead to gas or steam leakage depending upon the type of turbine and will further burst the casing [8], [9], [10].

Proper knowledge and skill is required to know he distribution of stresses for life assessment because, the turbine casing takes more time for repair/replacement [11], [12].Creep and fatigue crack propagation are the general issues in turbine components. Similarly, thermal fatigue failures due to transient temperature distribution are found commonly in gas turbines. Varying temperature field leads to huge stress variation which ultimately decreases the strength capacity of the casing material [13]–[16]. Casing is assembled with two halves, upper and lower half both together bolted tightly and fixed by application of bolt tensioner and hence the structure is pre-stressed. This pre-stressed effect in addition to fatigue loads generated during operation of gas turbine leads to reduce further the fatigue life of the casing [17], [18]. E. Poursaeidi and H. Bazvandi studied fatigue life of casing for developed crack on eccentric hole. They used ABAQUS software for the analysis and concluded that different crack propagation occur with material behaviour [19]. W. Choi et al., studied thermal fatigue stresses development and its effect in turbine casing of power plants. Nozzle fit corner was chosen for the analysis as it is often exposed to cracking due to thermo-mechanical low-cycle fatigue [1]. Choi woosung and Hyun jungseob calculated fatigue damage of steam turbine casing by stress analysis/ neubersrule [2]. Schwingshackl and Petrovinvestigated different non-linear models for dynamic flange behavior using non-linear dynamic analysis of casing [17]. E. Poursaeidi et al., carried out stress analysis to investigate crack of casing. For different working loads, the magnitude of concentration stress was comparatively studied which proved the eccentric pin hole as the main area for evolution of crack [10].

In literature, no work is reported on analysis of fatigue life of gas turbine casing due to effect of bolt pre-tension. The objective of this research work is to address the effect of boltpre-tension of casing towards its fatigue life and come up with a solution to strengthen the casing against such failures. And also to couple this with thermal boundary condition to evaluate their synergistic effect on fatigue life of gas turbine casing and to improve fatigue life by geometric modification. This analysis is achieved by doing a numerical modelling of the gas turbine casing using 3D modelling software Creo 2.0 (Pro/E). The existing casing design is first analyzed using ANSYS Workbench (V15.0). Later, after some modification in the casing design again analysis is carried out in ANSYS Workbench (V15.0) to study and compare the results for improved fatigue life cycle.

2. Modelling of Existing Design of Turbine Casing

After abstracting data from the standard work [20][21], the casing was drawn in two dimensional views and the same was revolved about its axis to get the required shape suitable for computing. The isometric view of gas turbine casing is shown in figure 1. In isometric view, lines on each axis are bound to be parallel with each lines subjected to non-convergence which plays a vital role in technical illustrations. Figure 2 shows the final assembled view of entire casing structure with nut and bolt incorporation by pre-tension. Since the analysis of entire structure is difficult and rather increases computational time owing to complex in geometry, hence to avoid such and to minimize the computational time the actual structure has to be simplified without compromising attributes of actual intent of work. Hence by including all necessary parameters which are essential to address, the effect of bolt pre-tension geometry of casing can be further simplified as shown in figure 3.

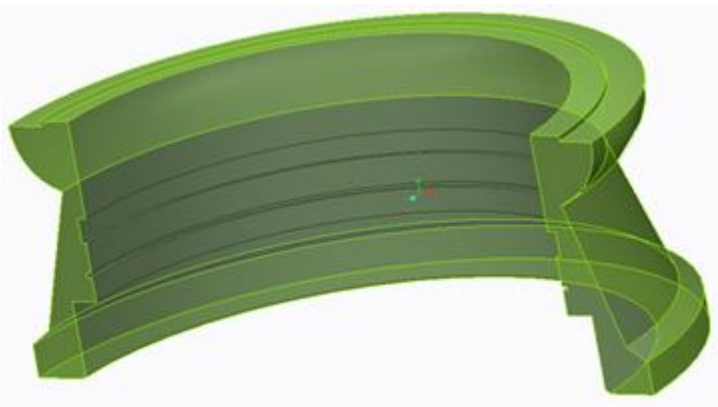

Figure 1. Isometric view of the casing

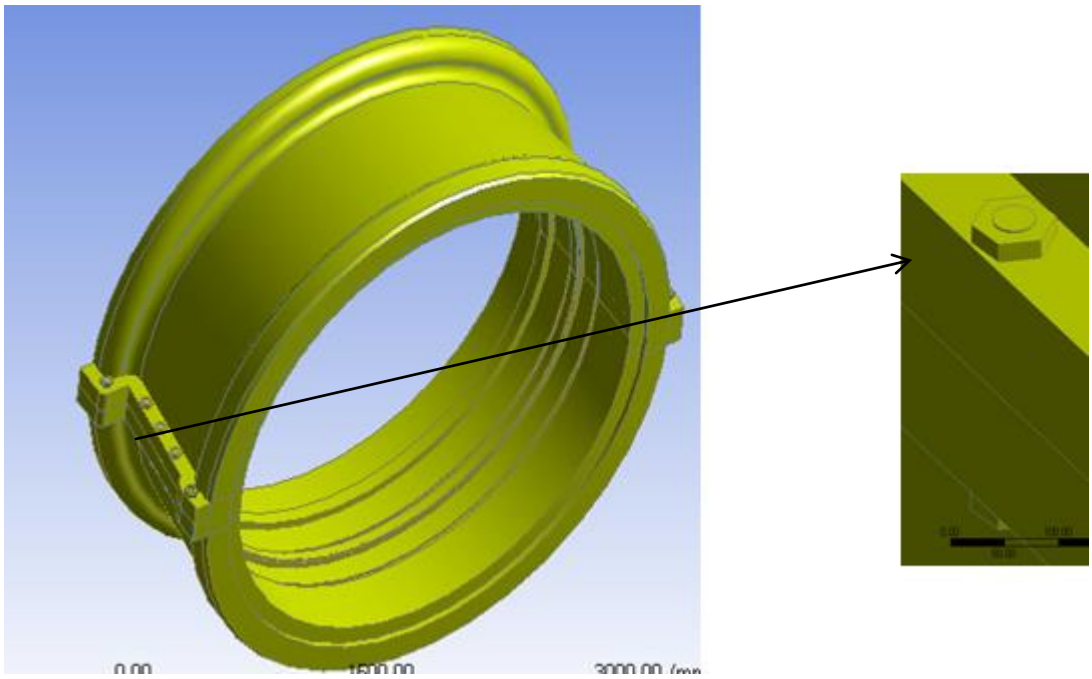

Figure 2. Assembled view of the casing

The real size of the casing is simplified further by the advantage of symmetry in order to reduce the computation time in ANSYS. Only the portion near the flange with the bolt and nut assembly alone is taken for the analysis as shown in figure 3.

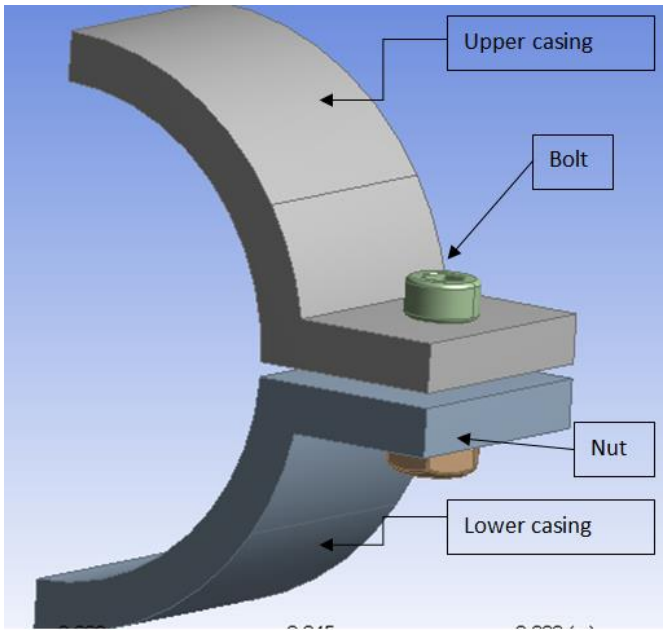

Figure 3. Simplified Casing Model to reduce computation time

3. Analysis of the Turbine Casing

3.1 Casing Material – A395 Ductile Cast Iron

The material properties (Table 1 and 2) were entered into the ANSYS engineering database to define casing material in the analysis part.

Table 1. Chemical details of casing material

Element	C	Si	Mn	Al	Cu	Ni	V	Cr	Mg	Ti	Co	Fe
Weight (%)	3.344	2.7	0.136	0.016	0.351	0.082	0.044	0.12	0.057	0.038	0.033	Balance

Table 2. Mechanical properties of the ASTM A395 ductile cast iron

Hardness(Brinell)	Tensile Strength, Ultimate (MPa)	Tensile strength, yield (MPa)	Modulus of elasticity (GPa)	Poisson's ratio
167	461	329	165	0.29

3.2 ANSYS Workbench – Static Structural Analysis

The figure 4 shows the step of assigning material properties input into the ANSYS workbench for casing and properties of casing material. The figure 5 consists of alternative stress diagram of casing material for fatigue strength. The casing assembly consists of upper casing, lower casing, nut and bolt. The both upper casing and lower casing has same material therefore both having same material properties. The material used for upper and lower casing is A395 steel, it is a structural steel and its material properties used are shown in figure 4. The most care taken in numerical modelling was to establish the contact between nut and bolt. This step consisted of contact between bolt and nut, where bolt head bottom face should be in contact with upper casing upper surface and nut's upper surface should be in contact with lower surface of lower casing. The establishment of contact is shown in the below figure 6. The next step was generating the mesh of the casing. The generating of mesh was done by ANSYS software by itself. The imported simplified geometry of the casing is meshed with 6774 element and 12259 nodes as shown in figure 7.

Outline of Schematic A2: Engineering Data

	A	B	C	D
1	Contents of Engineering Data		Source	Description
2	Material			
3	A395			
4	Structural Steel			Fatigue Data at zero mean stress comes from 1998 ASME BPV Code, Section 8, Div 2, Table 5-110.1
*	Click here to add a new material			

Properties of Outline Row 3: A395

	A	B	C	D	E
1	Property	Value	Unit		
2	Density	7111	kg m^-3		
3	Isotropic Elasticity				
4	Derive from	You...			
5	Young's Modulus	1.7E+11	Pa		
6	Poisson's Ratio	0.29			

Figure 4. Casing Material Input into Ansys

Table of Properties Row 9: Alternating Stress Mean Stress

	A
1	Mean Stress (Pa)
2	0
*	

	B	C
1	Cycles	Alternating Stress (Pa)
2	1E+05	2.5E+08
3	1E+06	2.25E+08
4	1E+07	2E+08
5	1E+08	190
*		

Chart of Properties Row 9: Alternating Stress Mean Stress

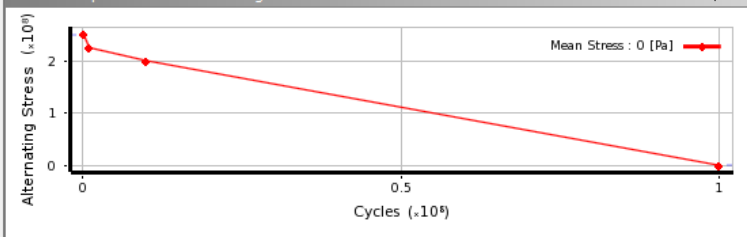

Figure 5. Fatigue Strength – A395

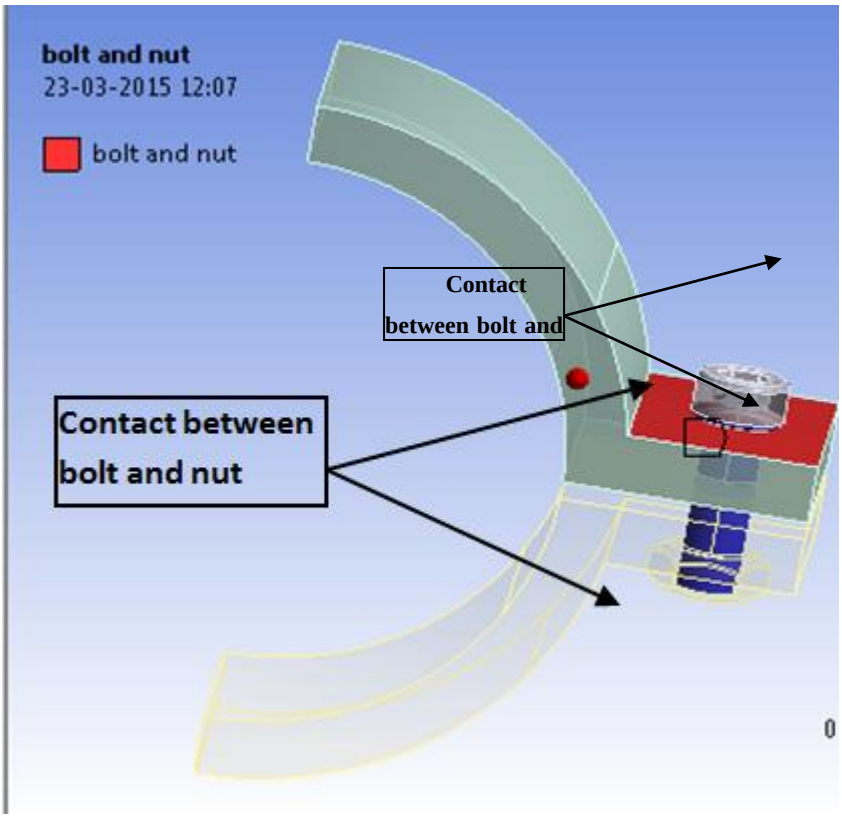

Figure 6. Contact between bolt and nut

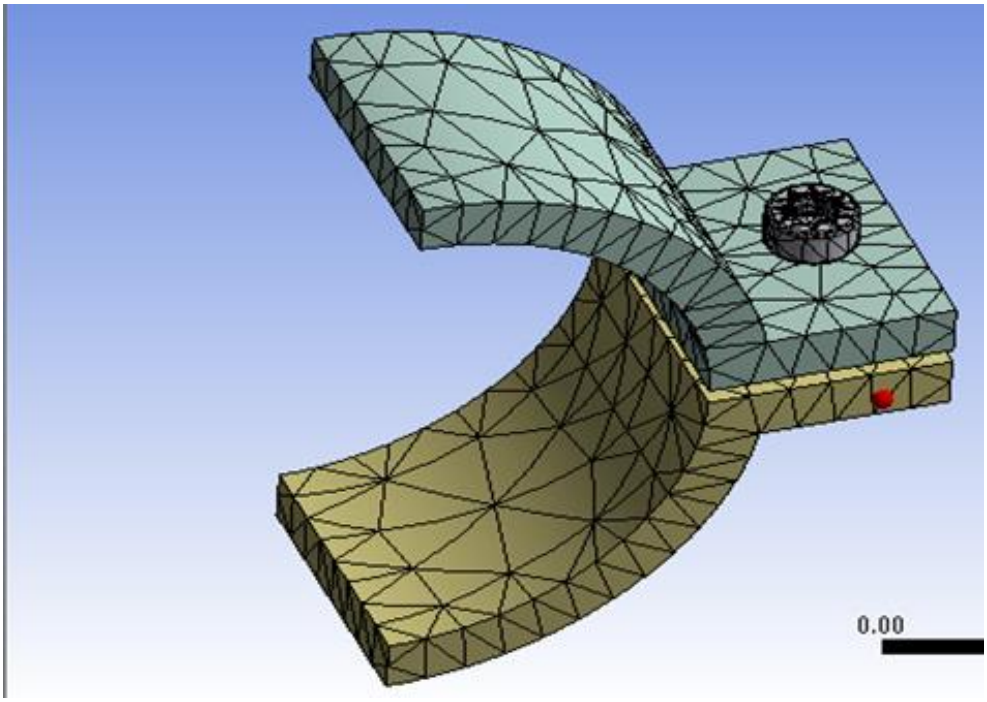

Figure 7. Meshed casing

3.3 Analysis Considering Structural Boundary Conditions and Loads

Boundary condition consists of real working environment and therefore should be accordingly. Here, for turbine casing a fixed support was defined which is shown in figure 8. The following sections discuss different conditions for gas turbine casing considered for this study as different cases.

3.3.1 Case 1 – Bolt pre-tension only

Static structural analysis was carried out considering bolt pre-tension only, as the first case. The bolt pre-tension applied was 1000 N which is shown in the figure 9. Figure 10 shows the stress distribution spectrum of assembly of upper and lower casing when a bolt pre-tension of 1000 N is applied. Stresses produced due to bolt show that the maximum stress is occurring in the bolt and minimum stress is in casing. The maximum stress was found to be 12.625 MPa. It is evident from the result that, areas away from the contact assembly are subjected to lower magnitude of stresses, whereas the areas near the contact are subjected to higher stress.

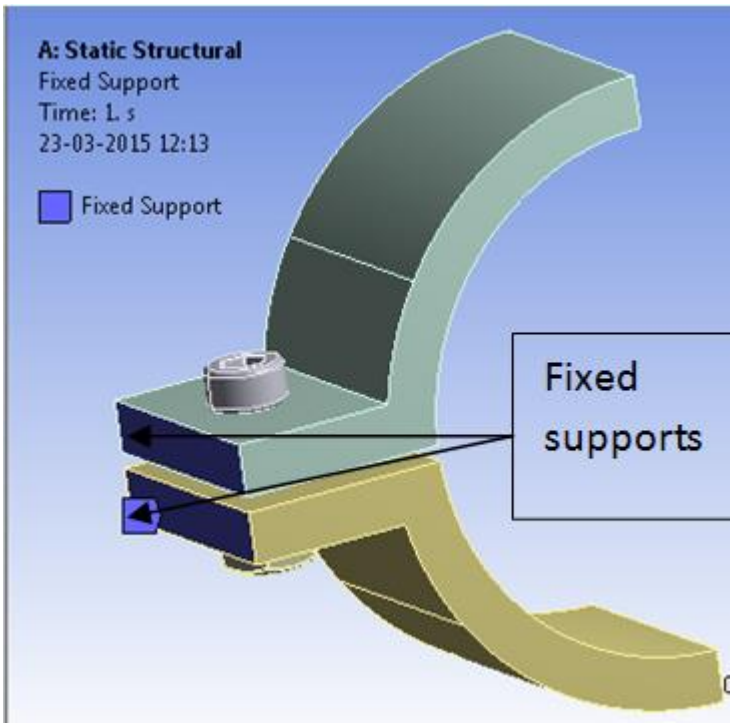

Figure 8. Fixed Support

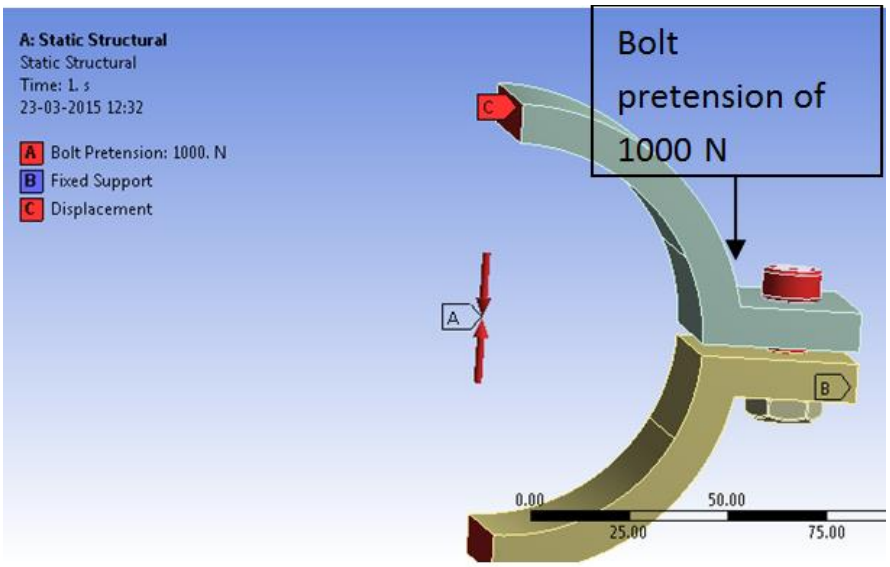

Figure 9. Bolt tension only

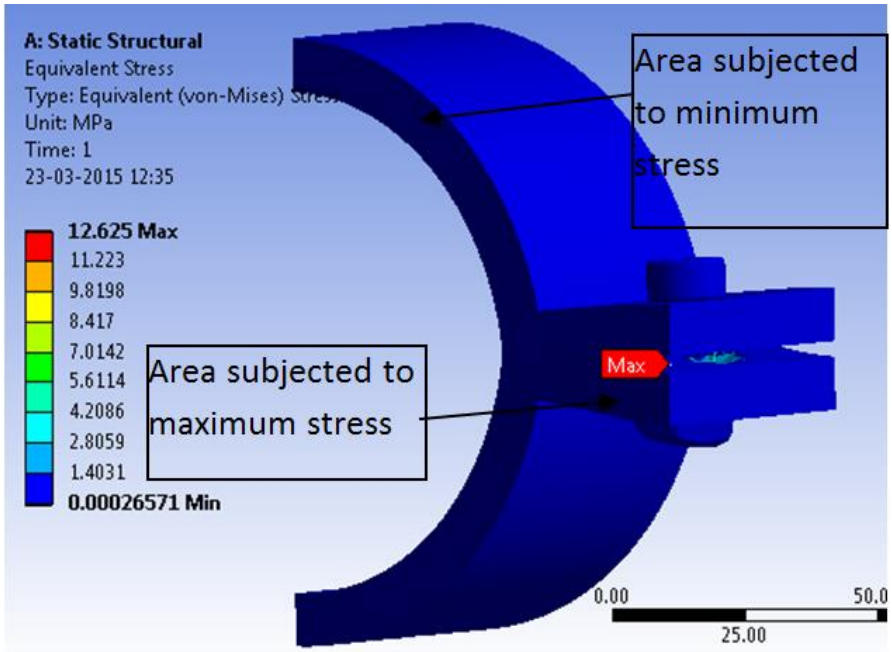

Figure 10. Stresses due to bolt tension only

3.3.2 Case 2 - Pressure Only

In the second case, static structural analysis was carried out considering pressure only. The pressure applied was 3 MPa on the upper and lower casing. Figure 11 shows the pressure applied to the casing. As the condition stated above, internal surface area of the entire assembly i.e. upper and lower half is subjected to an internal pressure of 3MPa, leading to expansion of the casing.

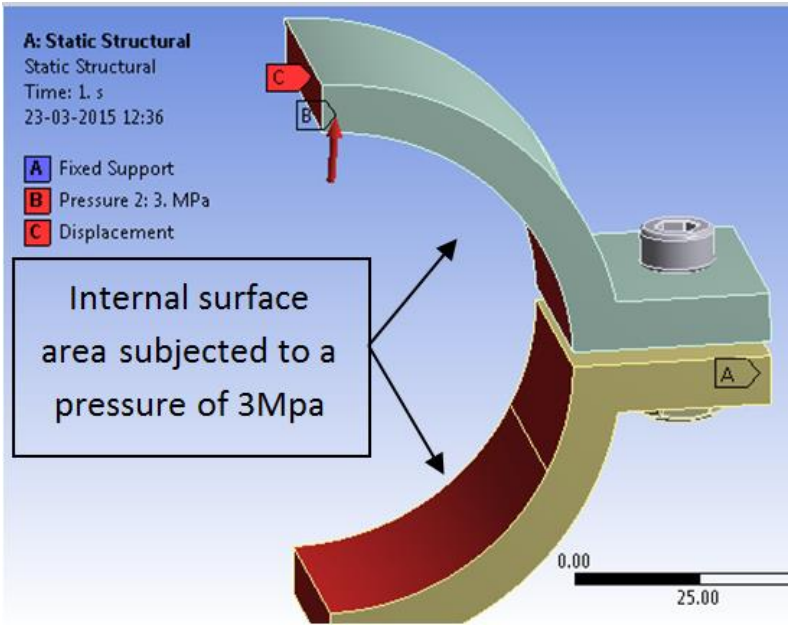

Figure 11. Pressure only

3.1.1 Case 3 - Pressure and Bolt Tension (Equivalent stress)

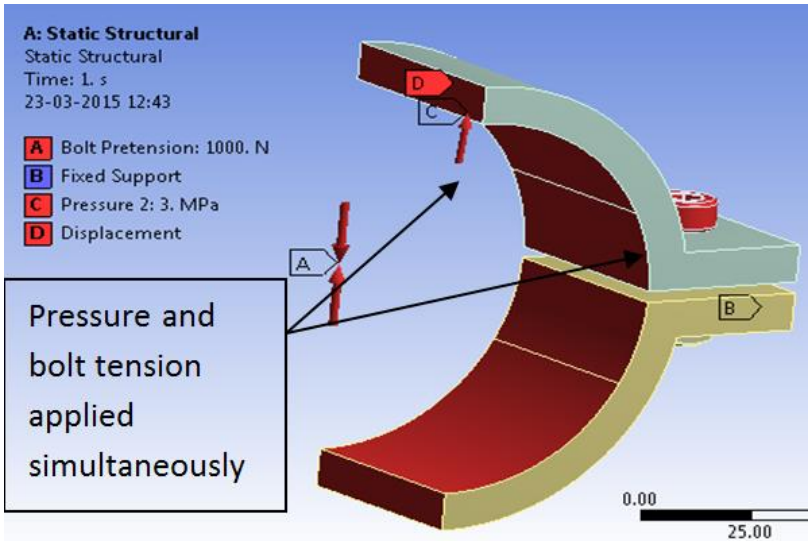

Figure 12. Pre-tension and Pressure combined

In case 3, static structural analysis was carried considering both, bolt pre-tension and pressure combined. The bolt pre-tension applied was 1000 N and the internal pressure applied was 3 MPa as shown in figure 12. Individual results are quite different when they are subjected to pressure and bolt pre-tension. But, when both are combined and applied the maximum stress was found to be 271.3 MPa. It is evident from the result that the bolt pre-tension plays a role in stress characteristics of the casing, such that the maximum stress excluding bolt pre-tension was 268.97

MPa, whereas the maximum stress including bolt pre-tension is found to be 271.3 MPa as shown in figure 13.

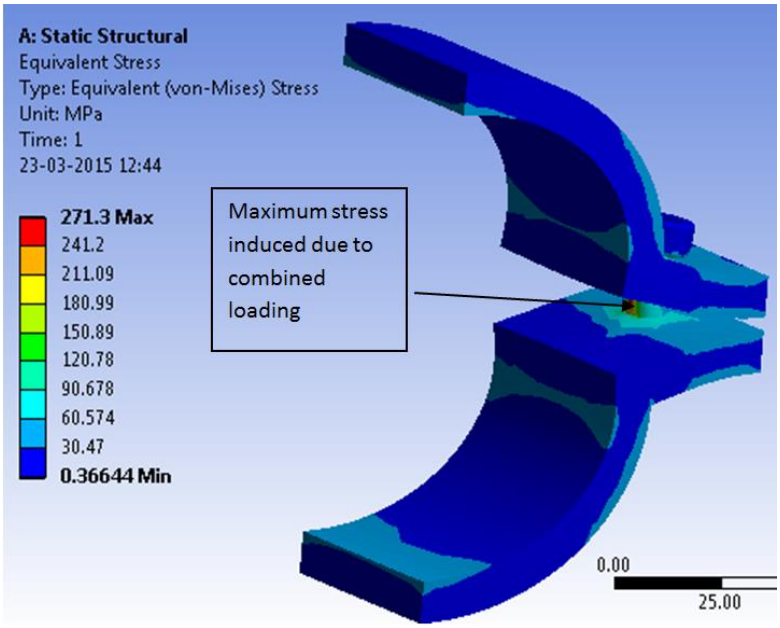

Figure 13. Equivalent Stress due to combined loading

3.3.3 Total Deformation

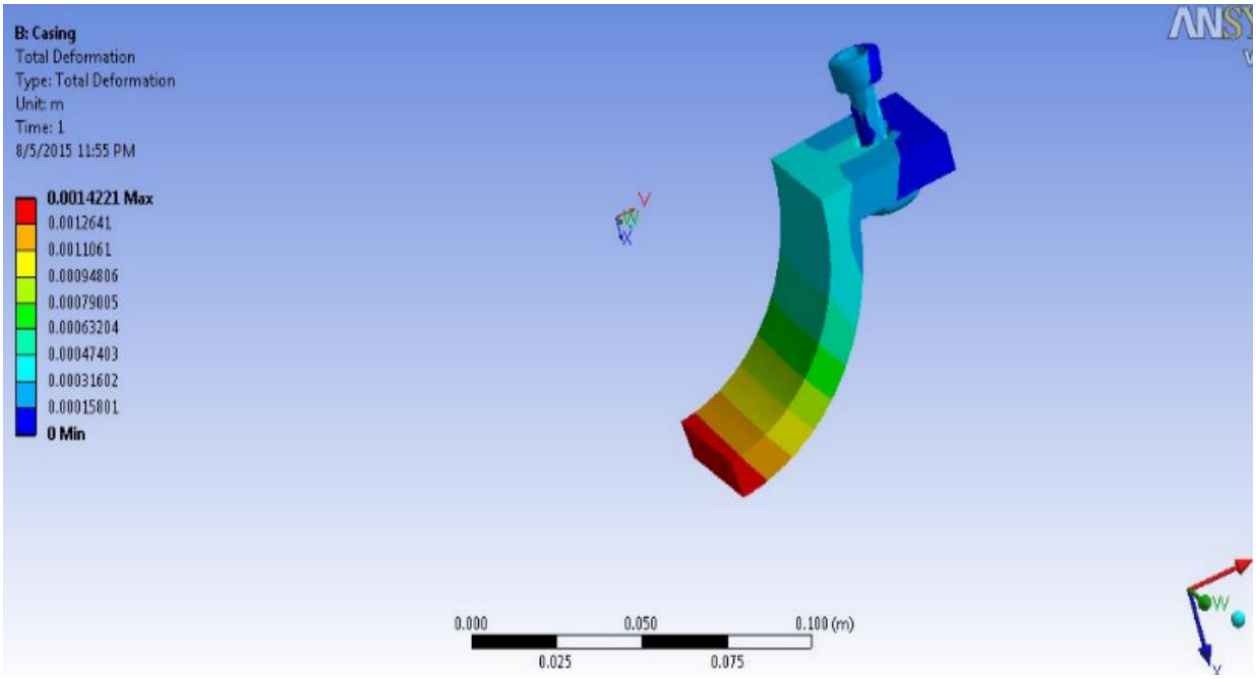

Figure 14. Total deformation of casing

Figure 14 shows the deformation of existing casing under the three conditions such as bolt pre-tension, fixed supports & internal pressures. The deformation was found to be 0.00142m

which is maximum at the farther ends of the casing whereas minimum deformation is 0. It is evident from the figure that the geometry away from the flange (nut and bolt assembly) is subjected to larger deformation compared to the geometry near the flange.

3.4 Analysis Considering Thermal Boundary Conditions

Coupling of existing structural boundary conditions for casing analysis with thermal boundary conditions i.e. inner and outer temperatures and its results are presented in this section. The inner casing surface temperature was specified as 400°C whereas the outer temperature was 60°C as shown in figure 15. In order to determine synergistic effect, thermal boundary conditions have to be considered. In the following sections different cases considering thermal effects and without considering are discussed. Figure 16 shows the temperature distribution along the thickness of the casing, with maximum temperature at inner surface being 400°C and lower temperature of 60°C at outer surface. As it is evident from the figure that temperature varies from inner to outer surface. Temperature is maximum at the inner surface with respect to its magnitude as shown with red band color, and the temperature at the outer surface is minimum and that part is out of thermal fatigue.

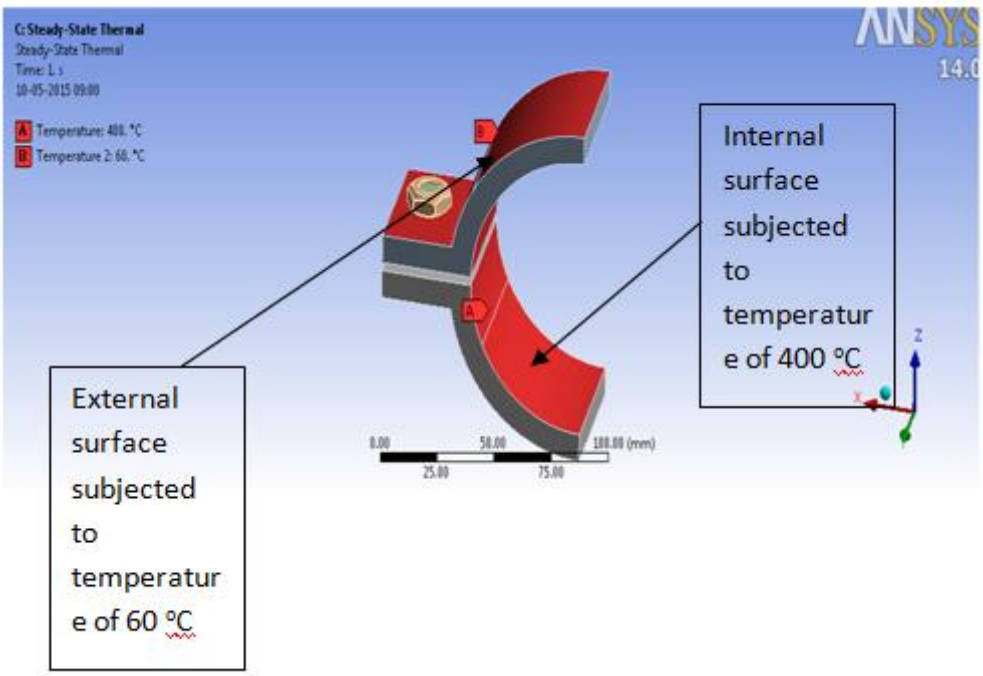

Figure 15. Thermal boundary conditions

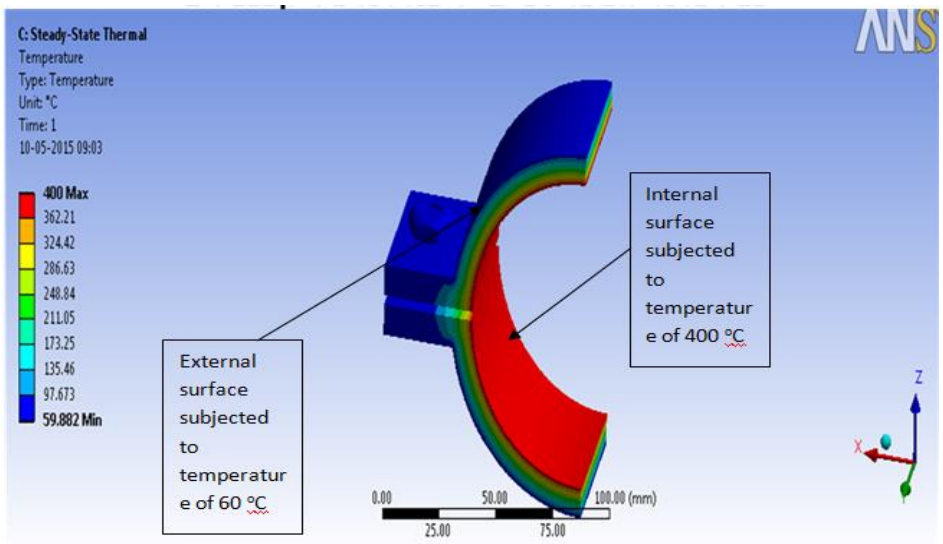

Figure 16. Temperature distribution

3.4.1 Fatigue Life of Casing Without Considering Thermal Effects

From figure 17 we can infer that, because of bolt pre-tension the fatigue life of the casing is affected to a larger extent as shown by red region in the figure 17, and at boundary conditions such as 3 MPa pressure and 1000 N pre-tension the minimum fatigue life is 0 and the maximum fatigue life is $9.98*10^7$ stress cycles. The flange of the casing away from vicinity of bolt pre-tension is subjected to high cycle fatigue.

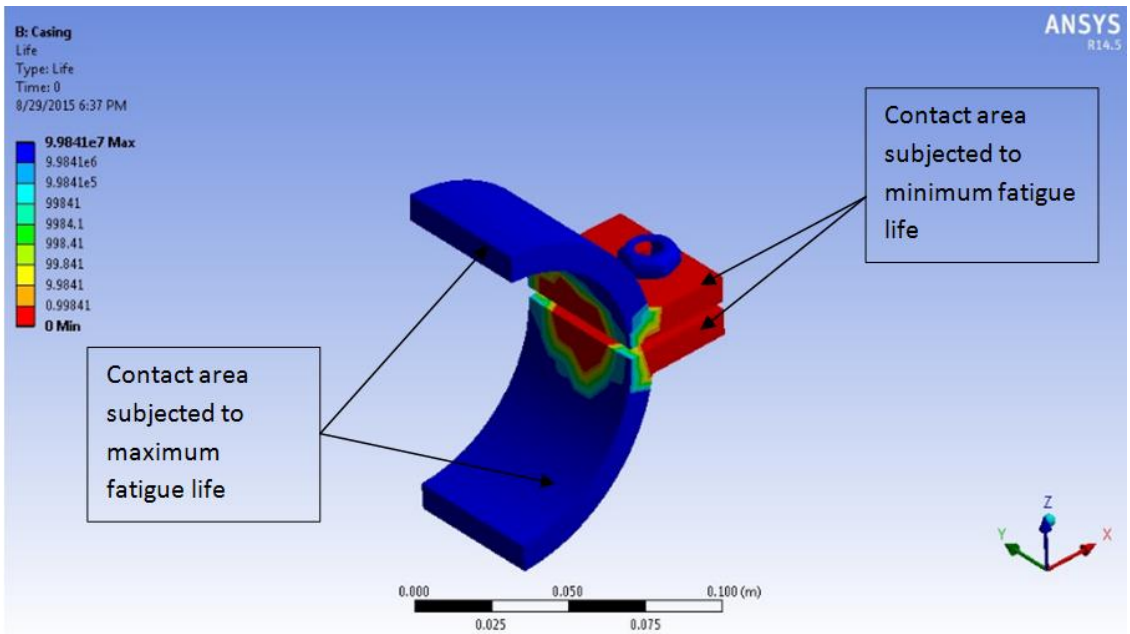

Figure 17. Fatigue life of casing without considering thermal effects

3.4.2 Fatigue Life of Casing Considering Thermal Effects

Figure 18 shows that considering the thermal boundary conditions for fatigue life analysis, decreases the maximum number of stress cycles to $9.87*10^7$ compared to stress cycles obtained without considering thermal boundary conditions, which is $9.98*10^7$.

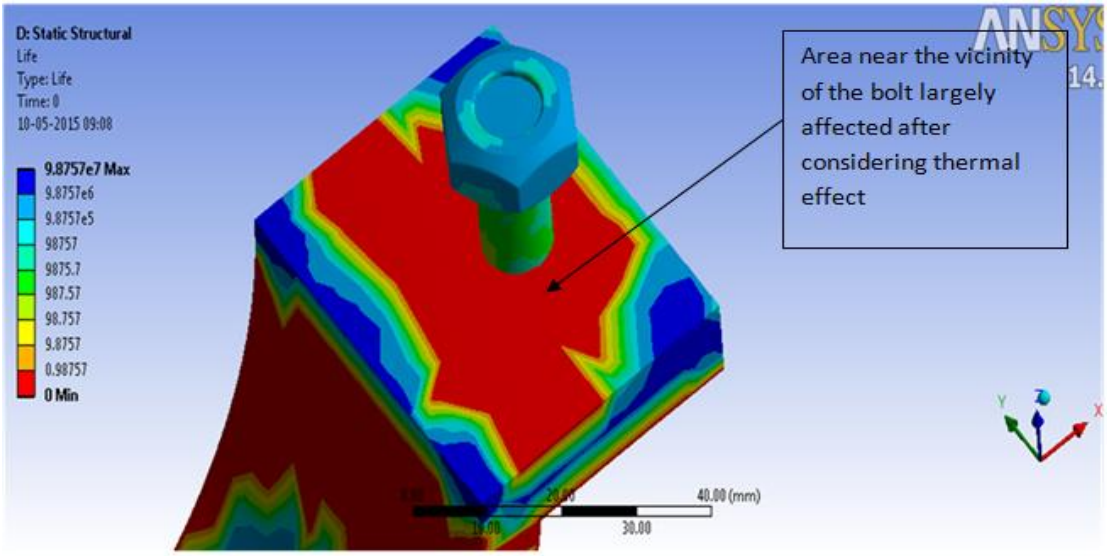

Figure 18. Fatigue life of casing considering thermal effects

3.4.3 Fatigue stress

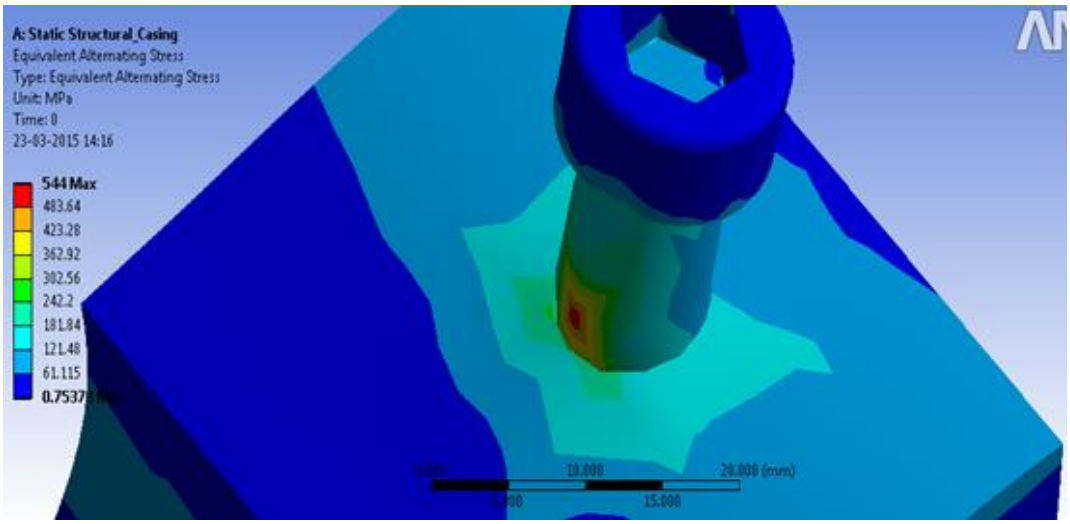

Figure 19. Fatigue stress

Existing casing with regards to fatigue stress analysis is shown in figure 19. From the figure we see that the stresses are being induced by the virtue of fatigue loadings. In the existing design the stress induced were 544 MPa as maximum at the bolt vicinity.

4. Modification of the Existing Casing

In previous sections we have analysed the casing in different domains considering various factors. The ultimate motive is to enhance its fatigue life or in other words to increase its endurance limit so that it can withstand more number of load cycles before its rupture or before it gets completely fractured. Modifications should be made into the existing design so as to improve fatigue life. The process of modification can be comprised of: Material modifications and Geometrical modification. In material modification, the existing material is replaced with suitable composite to accommodate to our requirement. Methods have been devised to modify the yield strength, ductility and toughness of both crystalline and amorphous materials. These strengthening mechanisms give engineers the ability to tailor the mechanical properties of materials to suit a variety of different applications [22], [23].

Geometrical modification is a conceptual and perpetual technology wherein we are bound to have certain sets of pre and post assumptions [24]. But it need not be necessary that the proposed design is capable of withstanding more number of cyclic loads when compared to the existing design it would like trial and error method and to validate it we required analysis tool such as ANSYS work bench whether the existing design is reliable. Here, the objective of modification is to avoid areas with more stress concentration to have better fatigue performances. And to address bolt pre-tension effect on the fatigue performances of turbine casings. And also, to couple it with thermal fatigue in order to evaluate its synergistic effect.

4.1 Modification of the Casing

As per the analysis of casing presented earlier, results have shown that failure of the casing is attributed by

- Flange, when it is subjected to high magnitude of stresses.
- Near the contact of upper and lower case assembly as a matter of higher order of contact stresses.

Hence the idea coming out of the result is to boost or to improve the strength of the flange so that it should withstand higher magnitude of stresses prior to its failure. Flange of the casing is subjected to higher pressure exerted by fluid flow and it is also subjected to higher thermal fatigue. Since the casing acts as shield to the entire gas turbine cycle operation, hence possessing strength to the casing especially flange, would leads to better results. Here the idea is to incorporate certain geometrical modification so as to improve the strength of the flange and to enhance its life against the fatigue. In order to improve the strength “ribs” have been incorporated as shown in figure 20.

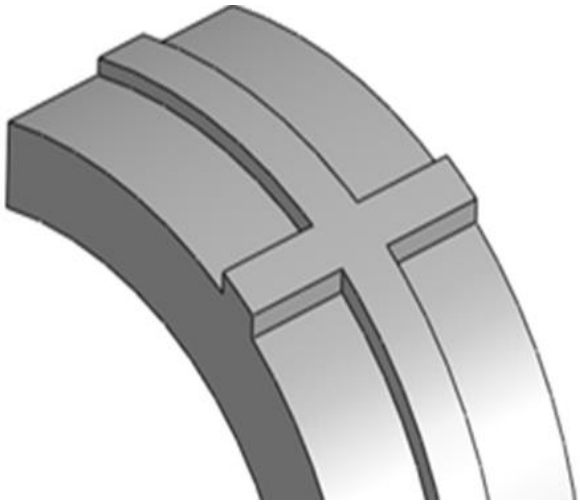

Figure 20. Ribs incorporated to flange of the casing

Ribs can be defined as the continuously raised geometries that run circumferentially which can be in straight fashion or might be zigzag and would build a tread on casing. Ribs are very much pronounced when the geometry is circular in nature. Hence incorporation of ribs will serve the purpose.This modification comes under geometrical modification as the entire geometry is subject to change[25].Ribs also provide a pavement for the material to flow plastically, in other words it will direct the stresses to pile upon. These ribs have to be incorporated during casting technique, but it is very sophisticated as flaws in the casting technique may lead to catastrophic failure of the geometry [26], [27], [28]. The other modification incorporated is to reduce contact stresses by introducing clamps as shown in figure 21.

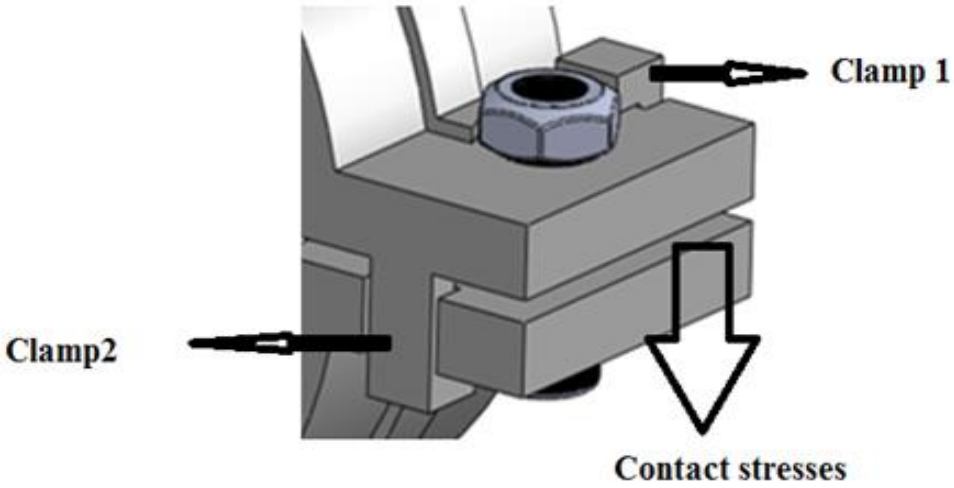

Figure 21. Contact stresses and clamps

This modification is to reduce contact stresses. The area as shown in the figure 21, near the vicinity of nut and bolt assembly is subjected to very high magnitude of contact stresses when gas turbine is in operation. As the casing structure is assembled with two halves and both together bolted tightly and fixed by application of bolt tensioner. So the casing structure is pre stressed and it effects in addition to fatigue loads generated during operation of gas turbine which leads to further reduction of the fatigue life of the casing. Hence by minimizing contact stresses with aid of clamps can lead to better fatigue life characteristics. The final modified gas turbine casing with modifications is as shown in the figure 22.

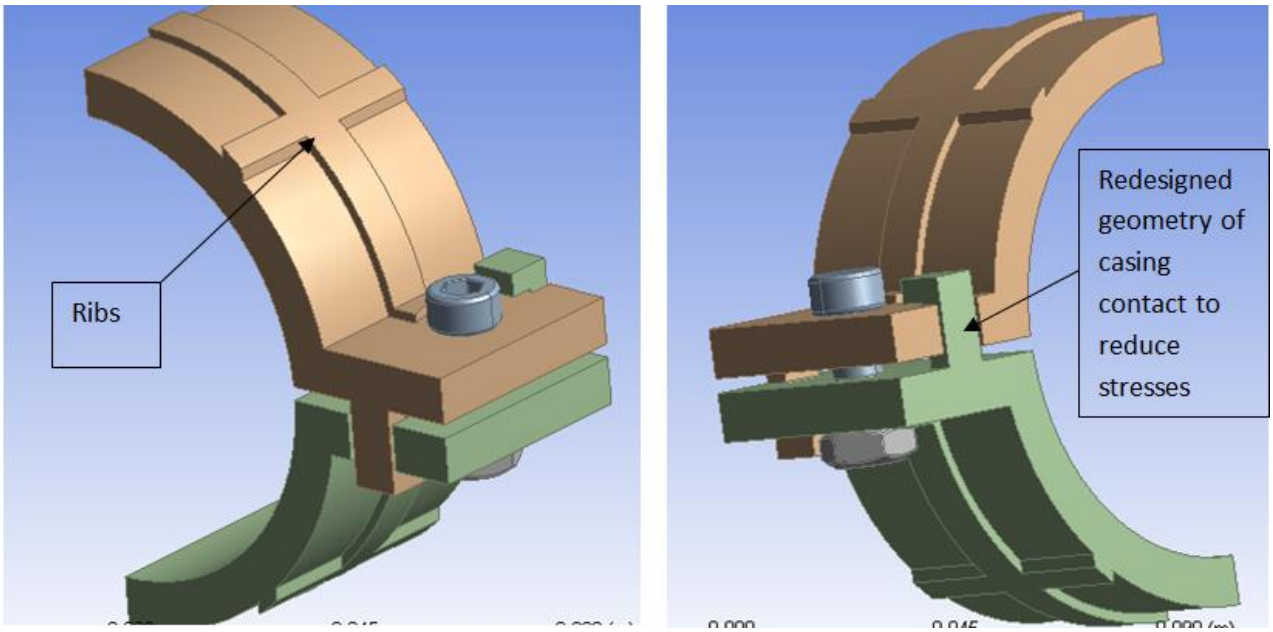

Figure 22. Modified casing

4.1 Modelling of the Modified Casing

The figure 23 and 24 show the material assignment to upper and lower casing of the gas turbine. The figures from 25-29 represent details of input to the ANSYS software for analysis of various factors. Figure 25 shows the modified model after meshing and figure 26 shows the combined load applied to the casing. Figure 27, 28 and 29 show the S-N curve values for material A395 and details of fatigue load applied.

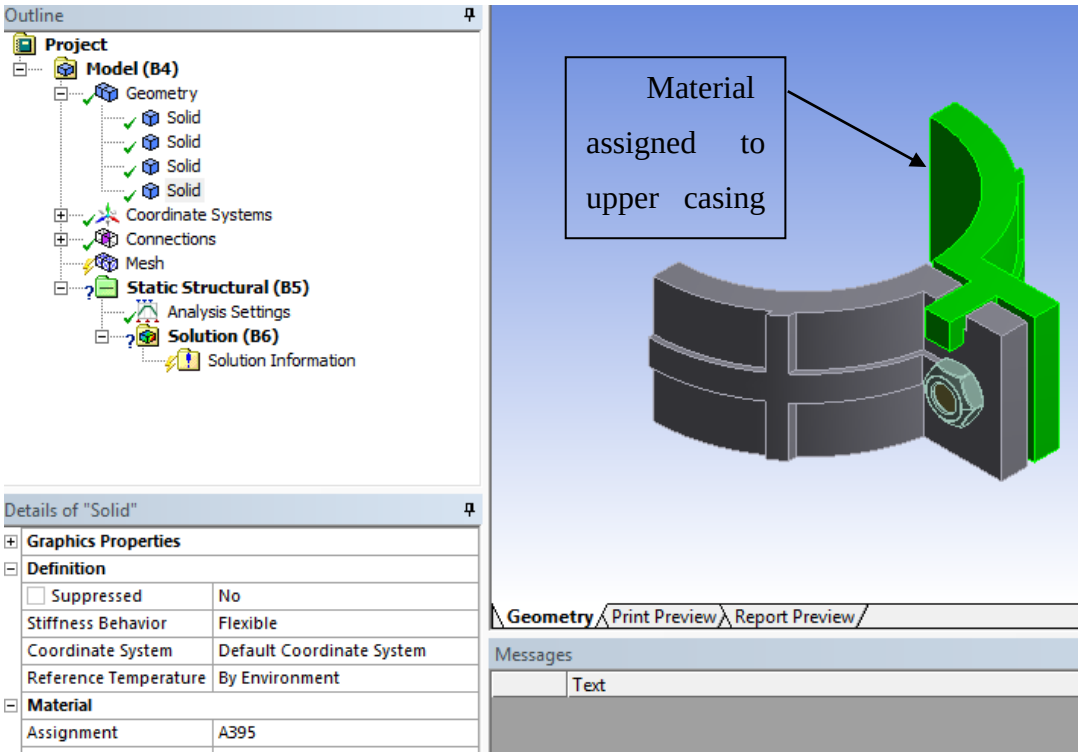

Figure 23. Material Assignment - upper casing

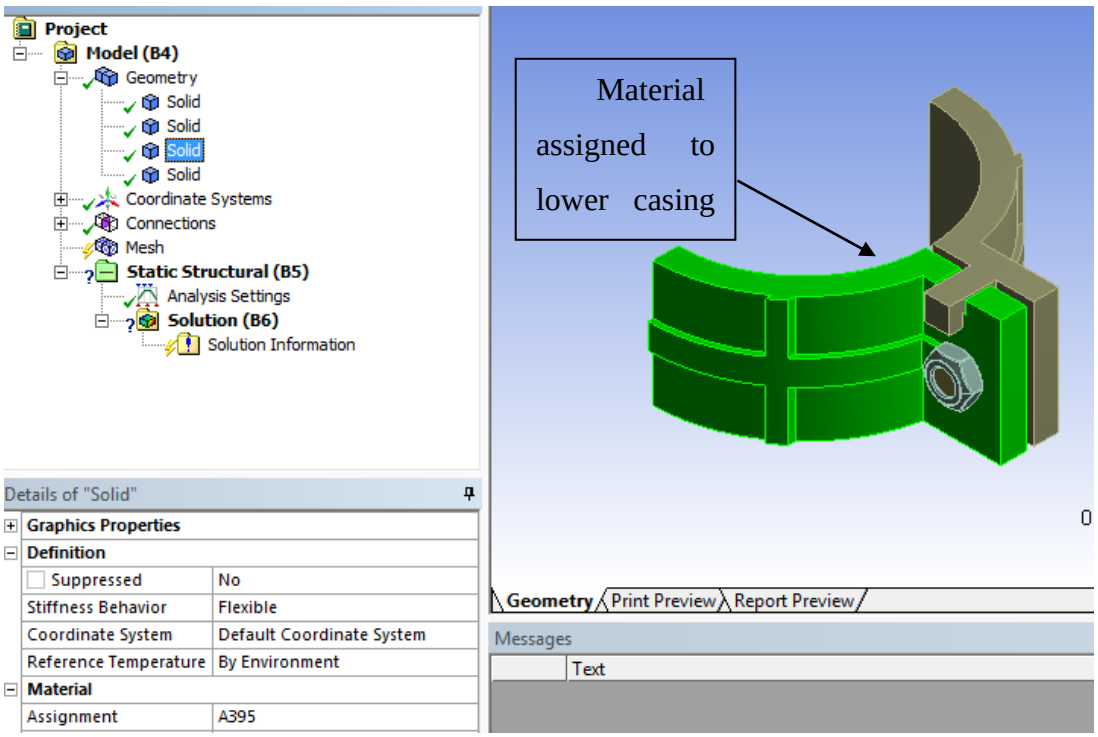

Figure 24. Material assignment- upper casing

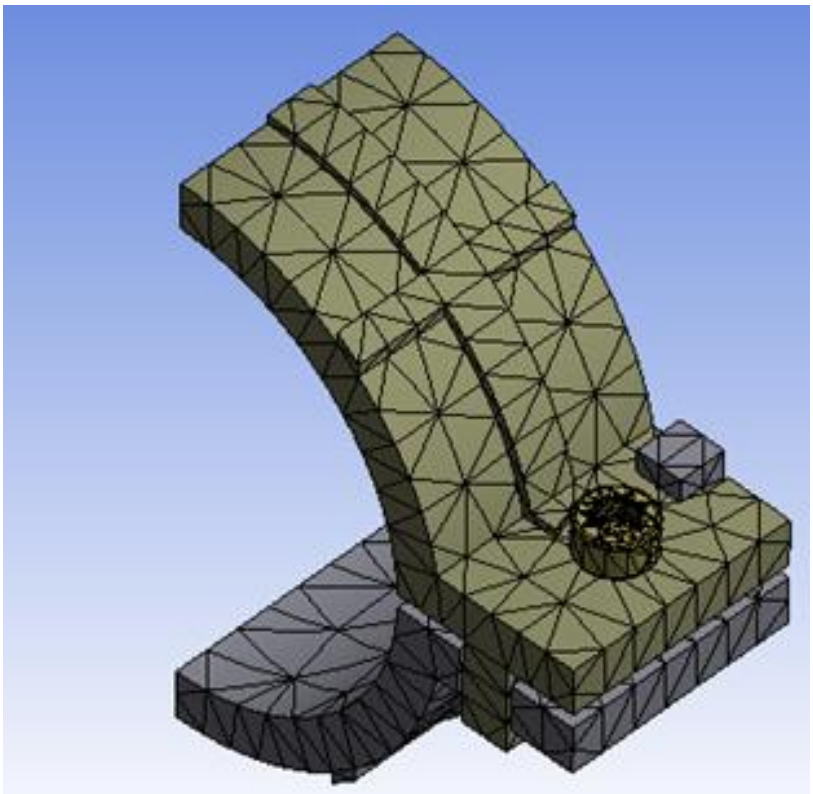

Figure 25. Meshed model after modification

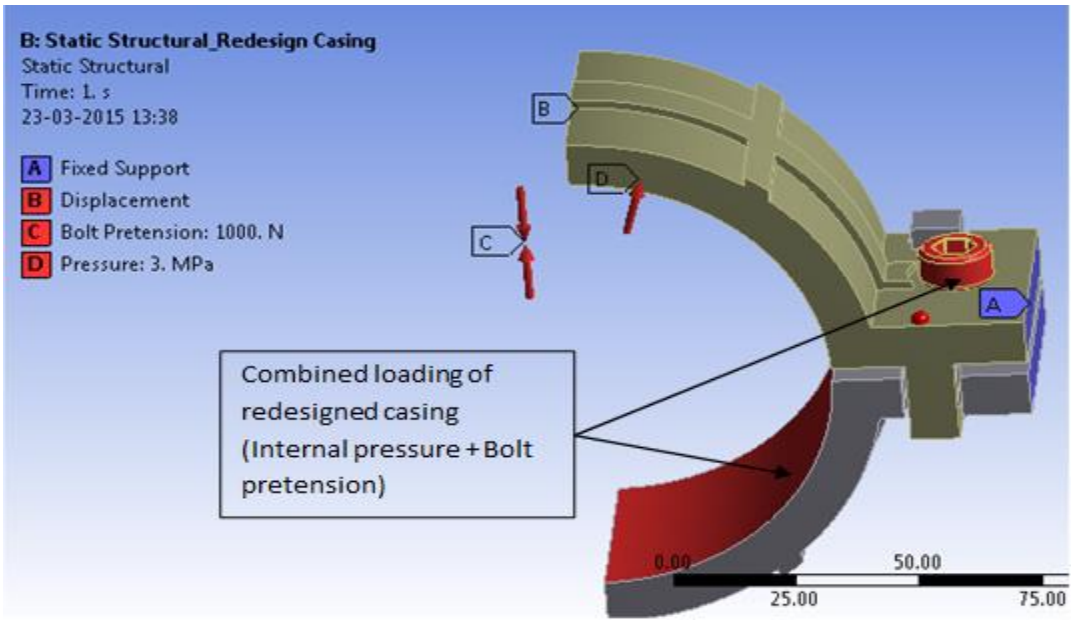

Figure 26. Combined loading of modified casing

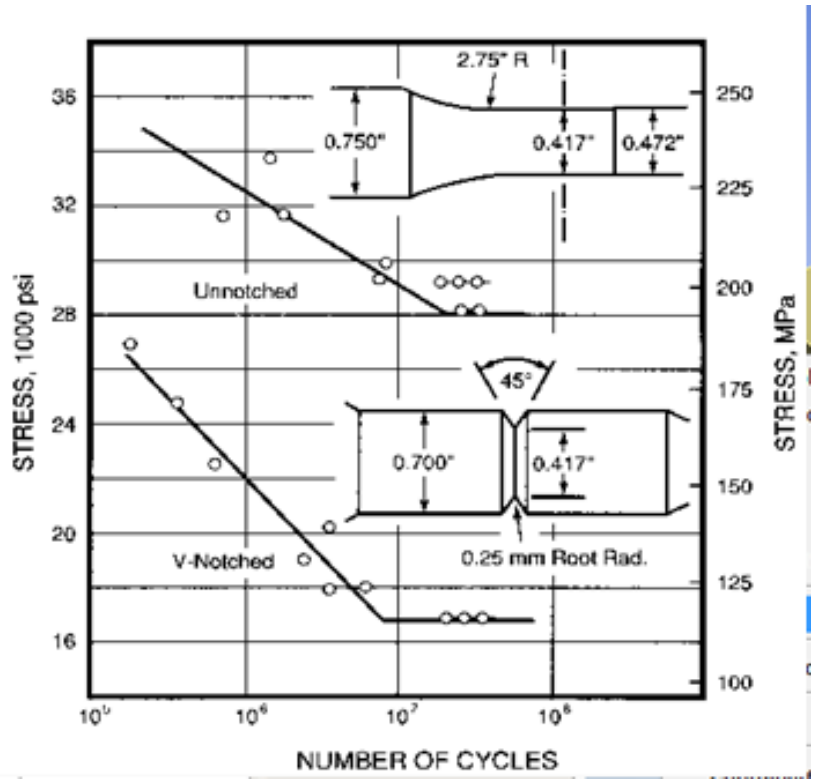

Figure 27. S-N curve for material A395

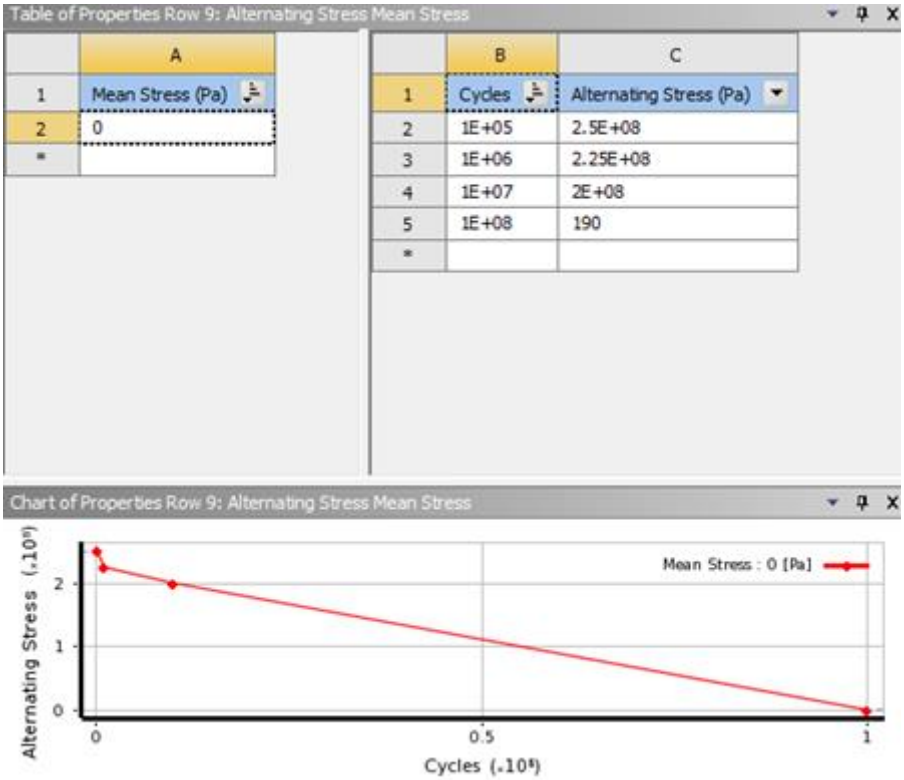

Figure 28. Entering S-N curve values

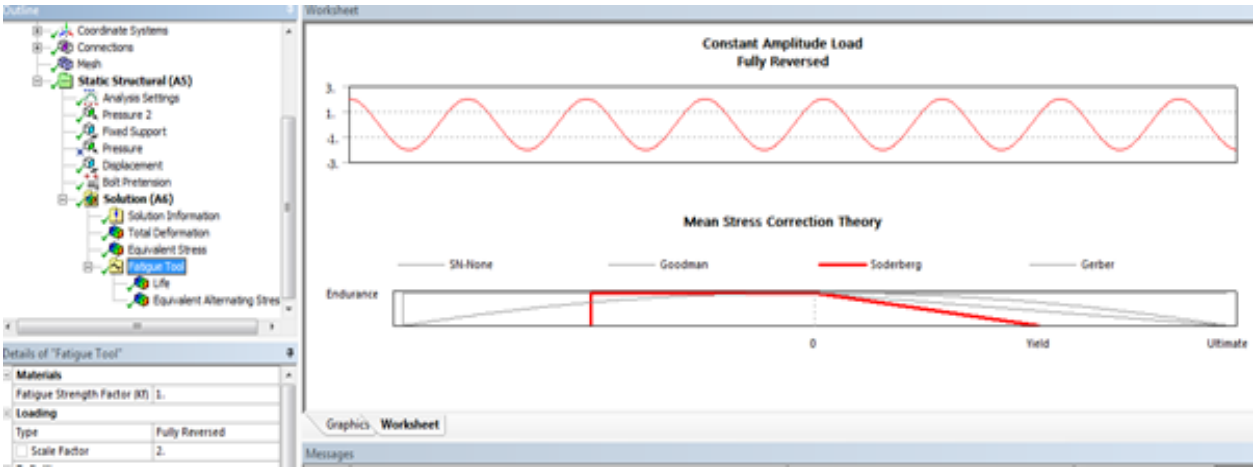

Figure 29. Details of fatigue loads

5. Results and discussion

The results pertaining to existing casing is shown in the section 3. This section is dedicated for discussion of results related to modified casing and compare them with the existing results. The structural and thermal boundary conditions adopted here are same as the existing casing design.

5.1 Equivalent stress of modified casing

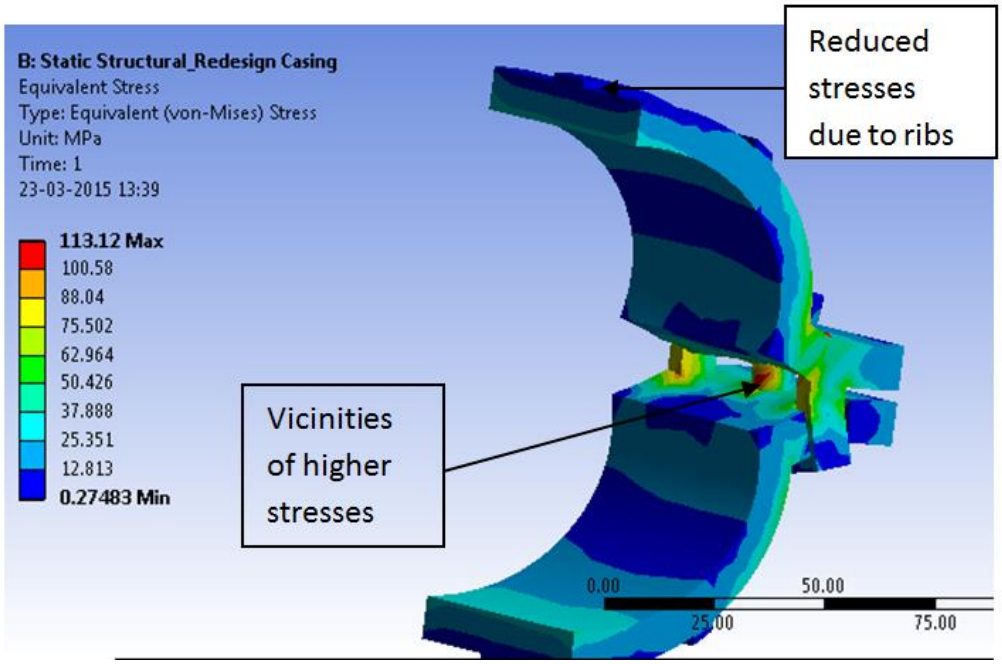

Figure 29. Equivalent Stress at flange surface

The modified casing has been analysed against bolt pre-tension of 1000 N and pressure of 3 MPa and the maximum stress was found to be 113.12 MPa against the existing casing where the

maximum stress for the same boundary condition was 271.3 MPa. It is evident from the results of the static analysis that the portion of the casing flange near the bolt as shown in figure 30 and 31, are subjected to minimum stress without pre-tension and the same is subjected to higher stress when pre-tension is applied along with the pressure. Though the difference in the stress magnitude is marginally small, but it makes a big difference if analysis is carried out for high pre-tension and pressure values.

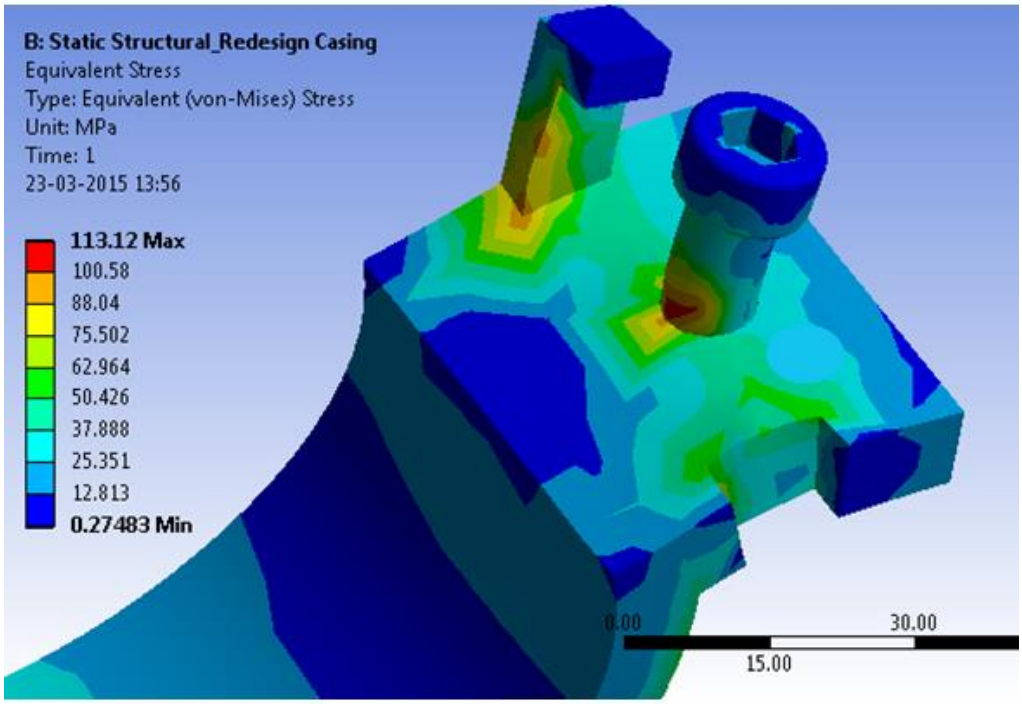

Figure 30. Enlarged view of equivalent stress in the flange of modified casing

5.2 Total deformation

Figure 32 shows the deformation of modified casing under three conditions, such as bolt pre-tension, fixed supports & internal pressures. The deformation was found to be 0.00073171m which is maximum at the farther ends of the casing whereas minimum deformation is 0. It is clear from the figure 32 that the geometry away from the casing is subjected to larger deformation compared to the geometry near the assembly. It is found from the modified casing that deformation is considerably reduced and the maximum deformation is very small compared to the existing casing.

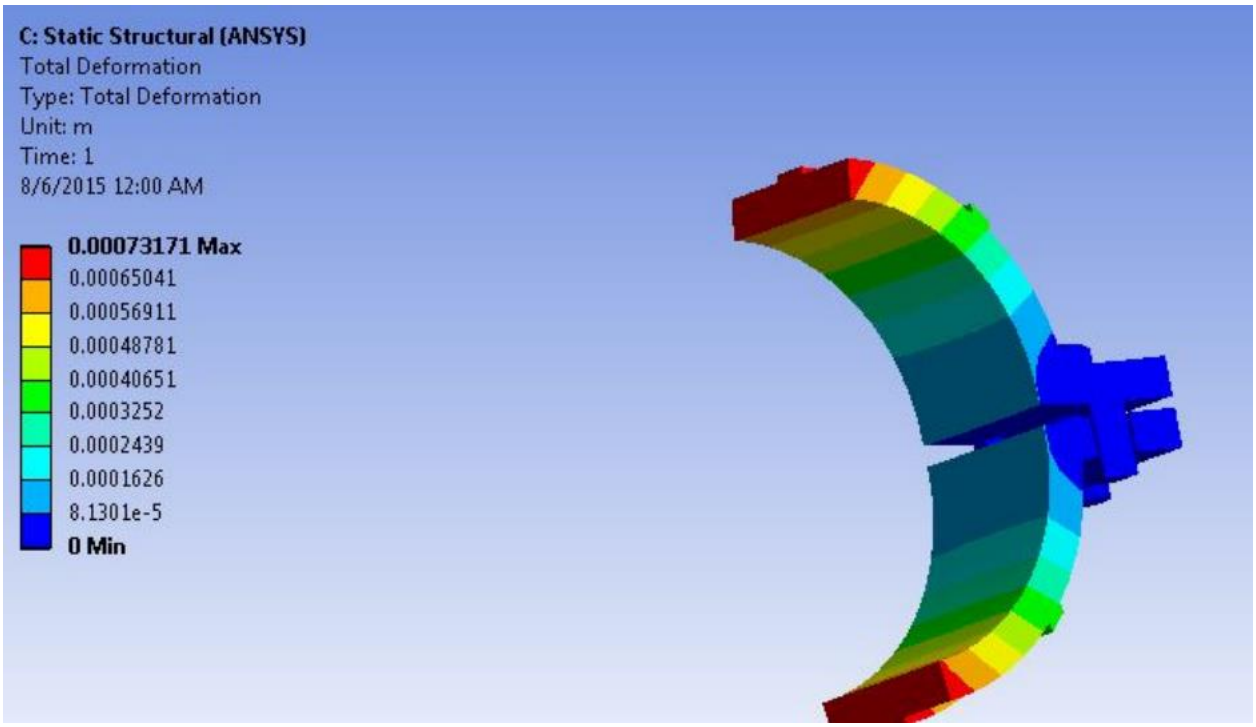

Figure 31. Total deformation of modified casing

5.3 Fatigue stress

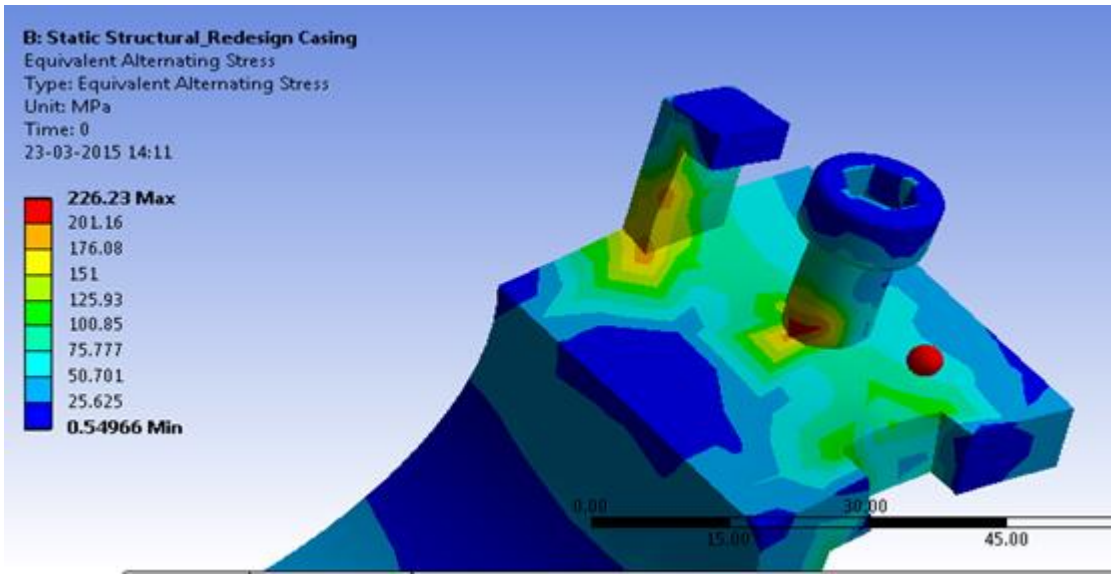

Figure 32. Fatigue stress in modified casing

Comparison can be made between existing (figure 19) and modified (figure 33) casing with regards to fatigue stress. We see from figure 33 that the stresses involved by the virtue of fatigue loadings, stresses are being induced. In the existing design the stress induced was 544 MPa when compared to its value from modified casing where maximum stress induced is 226.23Mpa. Hence,

stress induced is reduced in the modified casing compared to the existing one from 544 MPa to 226.23 MPa.

5.4 Fatigue life

The spectral distribution of fatigue life for modified casing is as shown in the figure 34. The minimum fatigue life was found to be 16533 cycles with boundary conditions like bolt pre-tension of 1000 N and pressure of 3 MPa. And most of the area near the vicinity of the casing is not bound to failure, in other words, most of the area is safe under the mentioned boundary conditions when compared to the existing casing, where minimum life is 0. But when it is being modified the minimum life is 16533 cycles as shown in the figure.

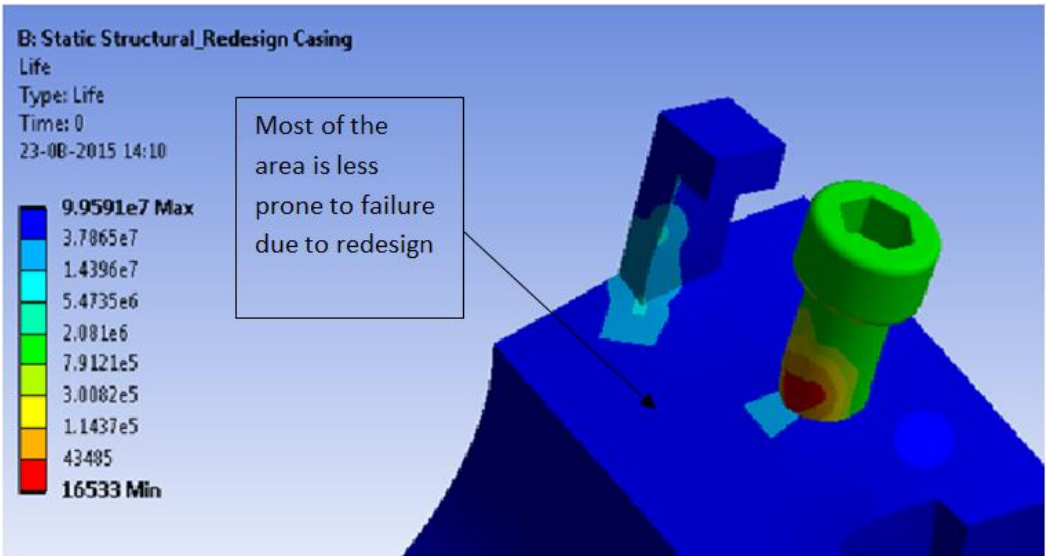

Figure 33. Fatigue life of modified casing

6. Conclusions

In the present study, the stress distribution was analysed by performing static structural analysis in Ansys software for the existing and the modified gas turbine casing. Following conclusions are drawn from the study:

- Fatigue life of modified casing was found to be 16533 cycles, whereas the fatigue life of existing casing was 0 cycles at the same boundary conditions.
- Fatigue stress of modified casing reduced to 226.23 MPa against 544 MPa of the existing casing design.
- The equivalent stress for bolt pre-tension of 1000 N and pressure of 3 MPa for existing design was found to be 271.3 MPa and that of modified is 113.2 MPa.

- The total deformation in existing design for the same boundary conditions was 0.001422 m and that of modified casing is 0.0007371 m.
- We can easily notice the difference in the existing and modified casing of gas turbine with respect to all the aspects considered in this study. The casing with inclusion of ribs and clamp has outperformed the existing design. Fatigue life, fatigue stress, deformation and equivalent stress have all significantly reduced.

References

1. W. Choi, K. Fujiyama, B. Kim, and G. Song, Development of thermal stress concentration factors for life assessment of turbine casings, 2012, Int. J. Press. Vessel. Pip., vol. 98, no. October, pp. 1–7.
2. W. Choi and J. Hyun, A Life Assessment for Steam Turbine Casing Using Inelastic Analysis, 2011, Mod. Phys. Lett. B, vol. 22, no. 22, pp. 1141–1146.
3. S. Adawi and G. Rameshkumar, 2016, Vibration Diagnosis Approach for Industrial Gas Turbine and Failure Analysis, Br. J. Appl. Sci. Technol., vol. 14, no. 2, pp. 1–9.
4. H. Bazvandi and E. Poursaeidi, The effect of diameter and distance of the additional holes on the fatigue life of a single hole specimen containing hole edge cracks, 2016, Int. Res. J. Appl. Basic Sci., vol. 10, no. 1, pp. 95–98.
5. M. Bounazef, S. Guessasma, and B. A. Saadi, The wear, deterioration and transformation phenomena of abradable coating BN-SiAl-bounding organic element, caused by the friction between the blades and the turbine casing, 2004, Mater. Lett., vol. 58, no. 27–28, pp. 3375–3380.
6. W. Chen, Z. Zhao, and X. Dai, Multi-objective optimization method for high pressure turbine casing based on thermal-structural coupling analysis, 2016 in 52nd AIAA/SAE/ASEE Joint Propulsion Conference, no. 29, pp. 1–7.
7. M. Collins, K. Chana, and T. Povey, Improved methodologies for time resolved heat transfer measurements, demonstrated on an unshrouded transonic turbine casing, 2015, Proc. ASME Turbo Expo 2015, vol. 138, no. November, pp. 1–11.
8. G. H. Farrahi, M. Tirehdast, E. Masoumi Khalil Abad, S. Parsa, and M. Motakefpoor, Failure analysis of a gas turbine compressor, 2011, Eng. Fail. Anal., vol. 18, no. 1, pp. 474–484.
9. J. Kiefer, T. Seeger, S. Steuer, S. Schorsch, M. C. Weikl, and A. Leipertz, Design and characterization of a Raman-scattering-based sensor system for temporally resolved gas analysis and its application in a gas turbine power plant, 2008, Meas. Sci. Technol., vol. 19, pp. 1–9.

10. E. Poursaeidi, A. Kavandi, K. Vaezi, M. R. Kalbasi, and M. R. Mohammadi Arhani, Fatigue crack growth prediction in a gas turbine casing, 2014, Eng. Fail. Anal., vol. 44, pp. 371–381.
11. E. . Masoumi Khalil Abad, G. H. . Farrahi, M. . Masoumi Khalil Abad, A. A. . Zare, and S. . Parsa, Failure analysis of a gas turbine compressor in a thermal power plant, 2013, J. Fail. Anal. Prev., vol. 13, no. 3, pp. 313–319.
12. S. Mohammad, H. Shari, H. Saeidi, and F. Forouzesh, Three dimensional analysis of low cycle fatigue failure in engine part subjected to multi-axial variable amplitude thermo-mechanical load, 2016, Eng. Fail. Anal., vol. 62, pp. 128–141.
13. J. J. Moverare, S. Johansson, and R. C. Reed, Deformation and damage mechanisms during thermal – mechanical fatigue of a single-crystal superalloy, 2009, Acta Mater., vol. 57, no. 7, pp. 2266–2276.
14. N. P. Padture, M. Gell, and E. H. Jordan, Thermal Barrier Coatings for Gas-Turbine Engine Applications, 2002, Sci. ' S COMPASS, vol. 296, no. April, pp. 280–284.
15. S. Pande, A. K. Pal, and R. Pant, Stress Analysis and Study of Fir-Tree Assembly of Turbine Disc, 2016, Int. J. Curr. Eng. Technol., vol. 6, no. 4, pp. 1252–1256.
16. E. Poursaeidi, H. Ghaemi, and M. Charmchi, Effects of temperature gradient on compressor casing in an industrial gas turbine, 2014, Case Stud. Therm. Eng., vol. 3, pp. 35–42.
17. C. W. and E. P. P. Schwingshackl, Modeling of Flange Joints for the Nonlinear Dynamic Analysis of Gas Turbine Engine Casings, 2012, J. Eng. Gas Turbines Power, vol. 134, pp. 122504–5.
18. E. Poursaeidi, M. Taheri, and A. Farhangi, Non-uniform temperature distribution of turbine casing and its effect on turbine casing distortion, 2014, Appl. Therm. Eng., vol. 71, no. 1, pp. 433–444.
19. E. Poursaeidi and H. Bazvandi, Effects of emergency and fired shut down on transient thermal fatigue life of a gas turbine casing, 2016, Appl. Therm. Eng., vol. 100, pp. 453–461.
20. M. Boyce, Gas turbine engineering handbook, Elsevier. 2011.
21. A. Almasi, "Gas Turbine Engineering Handbook," Chem. Eng., 2012.
22. X. Liu, P. Chu, and C. Ding, Surface modification of titanium, titanium alloys, and related materials for biomedical applications, 2004, Mater. Sci. Eng. R Reports, vol. 47, no. 3, pp. 49–121.
23. A. Bledzki and J. Gassan, Composites reinforced with cellulose based fibres, 1999, Prog. Polym. Sci., vol. 24, no. 2, pp. 221–274.
24. Y. Cao, S. Shibata, and I. Fukumoto, Mechanical properties of biodegradable composites reinforced with bagasse fibre before and after alkali treatments, 2006, Compos. part A Appl.

Sci. Manuf., vol. 37, no. 3, pp. 423–429.

25. S. Maloney, D. Tylutki, T. Last, and O. Colpan, Complementary ribs for added structural strength, 2016, Patent: US9310142 B2.
26. P. Keerthan and M. Mahendran, Experimental study on web crippling strength of hollow flange channels under end-one-flange and interior-one-flange load cases, 2016, Adv. Struct. Eng., vol. 19, no. 6, pp. 966–981.
27. J Wu, M Fu, X Tong, Y Qin, Heat stress evaluation at the working face in hot coal mines using an improved thermophysiological model, 2017, International Journal of Heat and Technology, Vol. 35, No. 1, March 2017, pp. 67-74.
28. P Miphokasap, Spatial Inventory of CO2 Emissions and Removals from Land Use and Land Use Changes in Thailand, 2017, Chemical Engineering Transactions, Vol. 56, pp 13-18.